System CD - Technical Specifications

Testing Methods of Electronic Connectors Follow Below Military Standards

Dielectric Withstanding Voltage	- Per MIL-STD-1344A method 3001.1
Contact Resistance	- Per MIL-STD-1344A method 3002.1
Insulation Resistance	- Per MIL-STD-1344A method 3003.1
Solderability	- Per MIL-STD-202F method 208D

High Density D Subminiature Connector

Electrical:
Current rating: 1 Amp
Dielectric Withstanding Voltage: 1000 VAC for one minute
Contact Resistance: < 20 mΩ
Insulation Resistance: > 5000MΩ
Operating Temperature:-40°C - +105°C

Physical:
Insulator: Black, Glass Filled Polyester
Flammability Rating: UL 94V-0
Contacts: Copper alloy
Contacts plating: Selective gold plating on surface contact area
Please see ordering code for plating options

D Subminiature Connector

Electrical:
Current rating: 3 Amps
Dielectric Withstanding Voltage: 1000 VAC for one minute
Contact Resistance: < 20 mΩ
Insulation Resistance: > 5000MΩ
Operating Temperature: -40°C - +105°C

Physical:
Insulator: Black, Glass Filled Polyester
Flammability Rating: UL 94V-0
Contacts: Copper alloy
Plating options:
Contacts plating: Selective gold plating on surface contact area
Please see ordering code for plating options

IDC D Subminiature Connector

Electrical:
Current rating: 1 Amp
Dielectric Withstanding Voltage: 1000 VAC for one minute
Contact Resistance: < 25 mΩ
Insulation Resistance: > 5000MΩ
Operating Temperature: -40°C - +105°C

Physical:
Insulator: Blue, Glass Filled Polyester
Flammability Rating: UL 94V-0
Contacts: Copper alloy
Contacts plating: Selective gold plating on surface contact area
Please see ordering code for plating options

D-Sub Shell Size

D-SUB CONNECTOR	HIGH DENSITY D-SUB CONNECTOR	SHELL SIZE
9 Positions	15 Positions	E 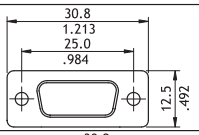
15 Positions	26 Positions	A 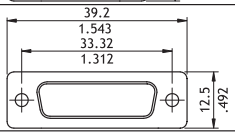
25 Positions	44 Positions	B 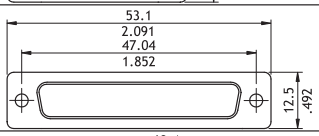
37 Positions	62 Positions	C 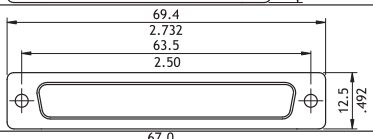
50 Positions	78 Positions	D 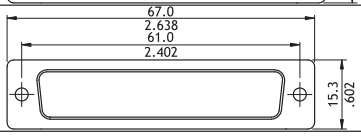

D-Sub Printed Circuits Board Hole Patterns

9 Positions

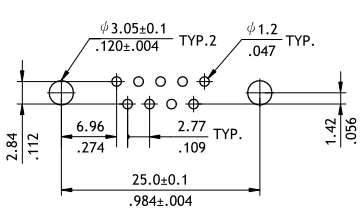

25 Positions

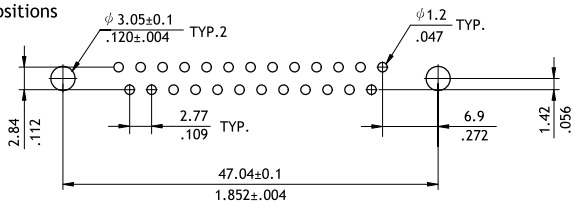

15 Positions

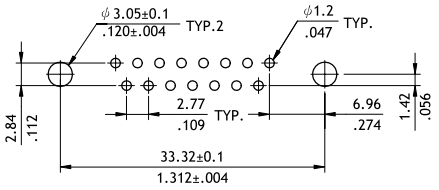

37 Positions

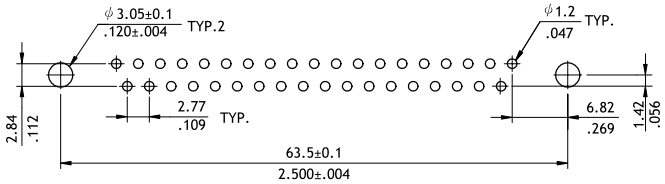

50 Positions

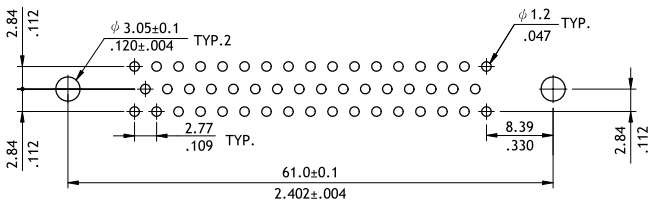

High Density D-Sub Straight DIP Solder Printed Circuits Board Hole Patterns

	Plug	Receptacle
15 Positions	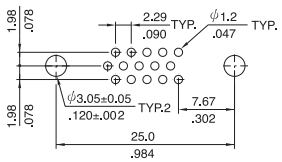	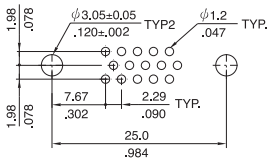
26 Positions	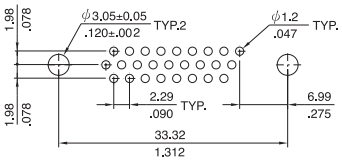	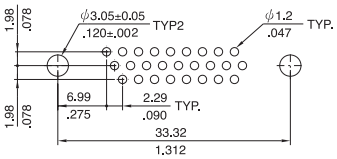
44 Positions	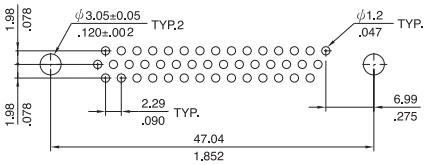	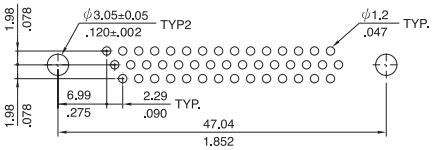
62 Positions	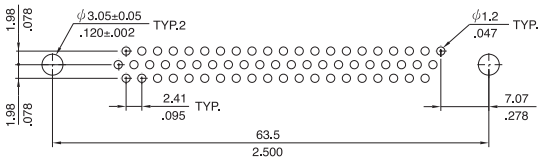	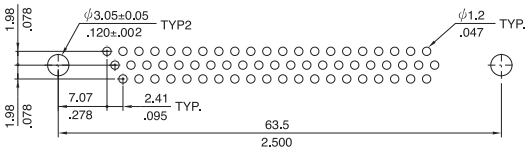

High Density D-Sub Right Angle DIP Solder Printed Circuits Board Hole Patterns

	Plug	Receptacle
15 Positions	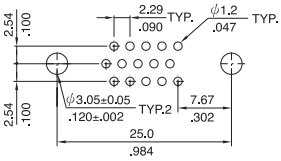	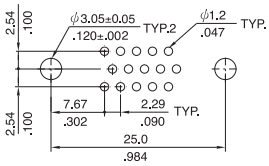
26 Positions	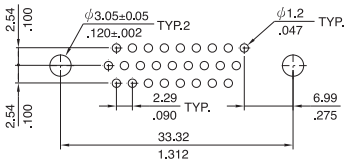	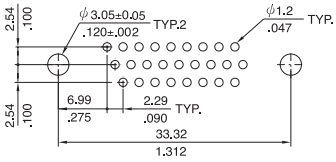
44 Positions	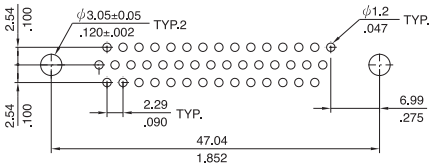	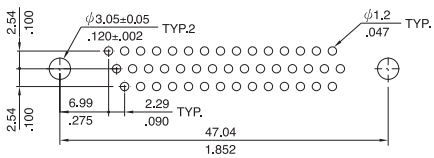
62 Positions	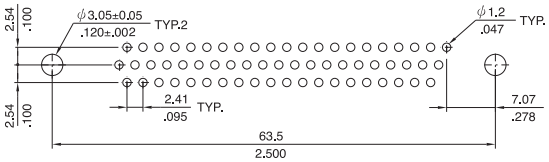	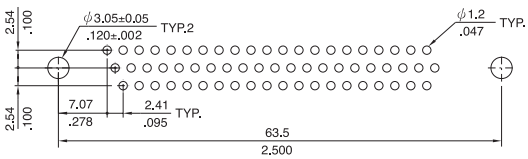

D-Sub Accessories

P/N : CDHWE123000

N0	PART NO.	DESCRIPTION
1	CDHWE105S00	ATTACHED SCREW
2	CDHW0001W00	FLAT WASHER
3	CDHW0002W00	SPLIT WASHER
4	CDHWE101N00	NUT

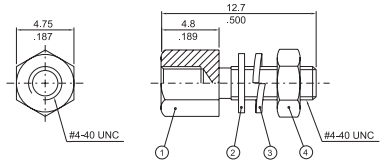

P/N : CDHWE124000

N0	PART NO.	DESCRIPTION
1	CDHWE106S00	ATTACHED SCREW
2	CDHWE101N00	NUT

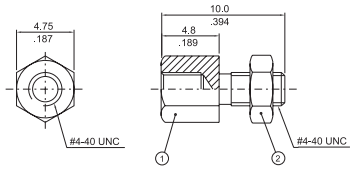

P/N : CDHWE128000

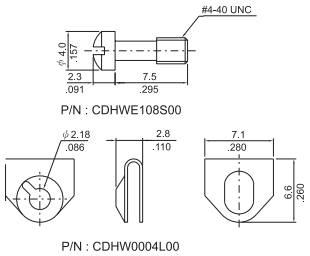

P/N : CDHWE145000

N0	PART NO.	DESCRIPTION
1	CDHWE111S00	ATTACHED SCREW
2	CDHW0001W00	FLAT WASHER
3	CDHW0003W00	WASHER WITH TEETH
4	CDHWE101N00	NUT

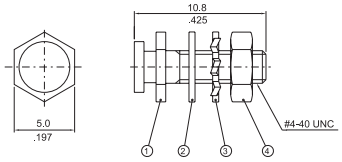

P/N : CDHWE***S00

Part No.	Dimension A
CDHWE101S00	11.8(.465)
CDHWE105S00	12.7(.500)
CDHWE106S00	10.0(.394)
CDHWE107S00	17.8(.701)

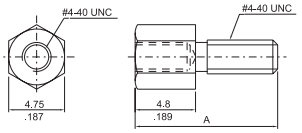

P/N : CDHWE10*N00

Part No.	Dimension A
CDHWE102N00	6.2(.244)

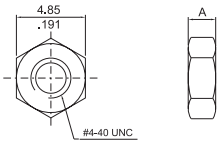

P/N : CDHWE110S00

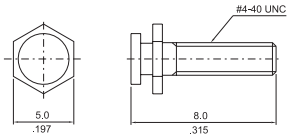

D-Sub PCB Mounting Options

0 Riveted front and rear shell with ϕ3.05mm Hole

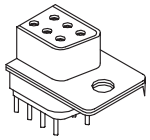

C Riveted #4-40 UNC open nuts on rear shell
DIM. L= 4.0mm (Standard)

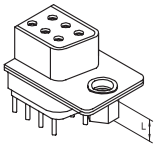

D Riveted #4-40 UNC close ground stand-off on rear shell

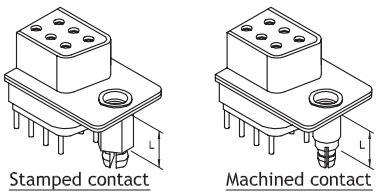

Stamped contact (DIM. L= 6.0 mm) | Machined contact (DIM. L= 7.4 mm)

A Riveted #4-40 UNC close nuts on front shell
DIM. L= 5.8mm (Standard)

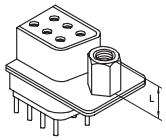

F Riveted ground hooks with #4-40 UNC open

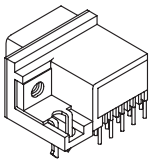

I Riveted ground tabs with #4-40 UNC open

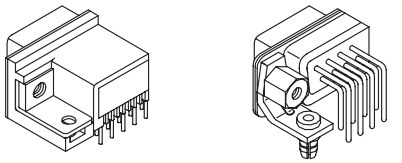

Stamped contact | Machined contact

B Riveted #4-40 UNC open nuts on front shell
DIM. L= 4.0mm (Standard)

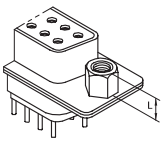

G Riveted ground hooks pre-loaded #4-40 UNC Hex screws

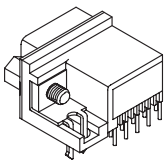

J Assembly ground hooks by #4-40 UNC Hex screws

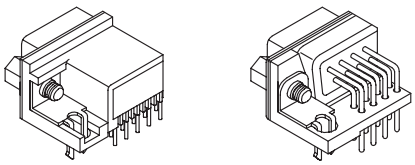

Stamped contact | Machined contact

CD01 Series High Density Solder D-Sub

◎ Mate with standard D-Sub
◎ With metal shell and solder contacts
◎ Riveted Hex nuts options available

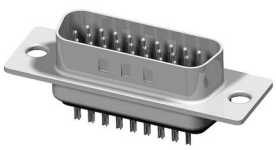
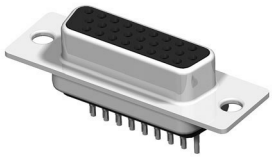

P/N	CD01**PA1**

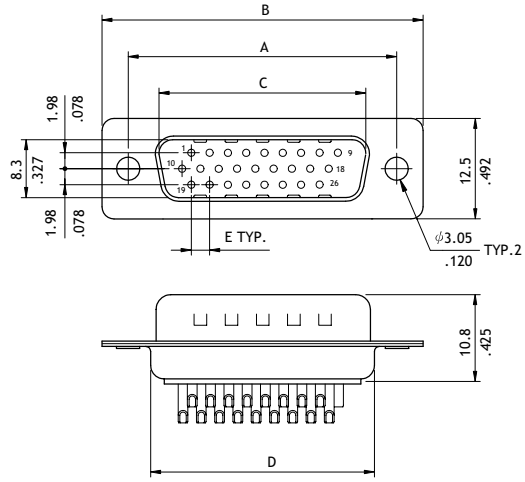

Plug Connector

Circuits	Dimension				
	A	B	C	D	E
15	25.0(.984)	30.8(1.213)	16.92(.666)	19.2(.756)	2.29(.090)
26	33.32(1.312)	39.2(1.543)	25.25(.994)	27.7(1.091)	2.29(.090)
44	47.04(1.852)	53.1(2.091)	38.96(1.534)	41.1(1.618)	2.29(.090)
62	63.5(2.500)	69.4(2.732)	55.42(2.182)	57.3(2.256)	2.41(.095)

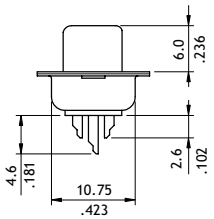

P/N	CD01**SA1**

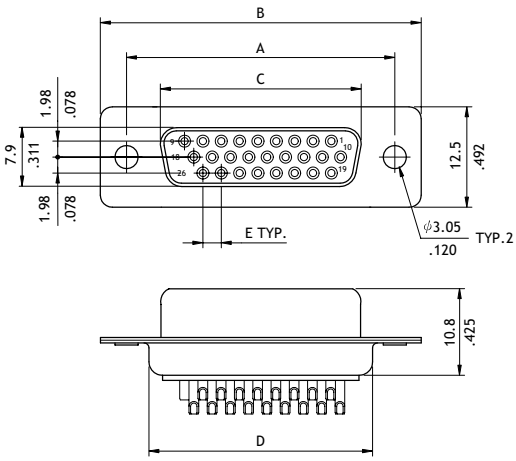

Receptacle connector

Circuits	Dimension				
	A	B	C	D	E
15	25.0(.984)	30.8(1.213)	16.3(.642)	19.3(.760)	2.29(.090)
26	33.32(1.312)	39.2(1.543)	24.6(.969)	27.7(1.091)	2.29(.090)
44	47.04(1.852)	53.1(2.091)	38.3(1.508)	41.1(1.618)	2.29(.090)
62	63.5(2.500)	69.4(2.732)	54.8(2.157)	57.3(2.256)	2.41(0.95)

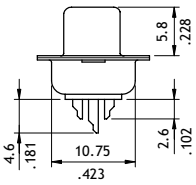

Ordering Code

❶	❷	❸	❹	❺	❻
CD01	15	P	A	1	00

❶ Series No.
❷ No. of Circuits: 15, 26, 44, 62
❸ Connector Type: P = Plug
S = Receptacle
❹ Plating Option: A = Selective Gold flash over Nickel
*Optional plating available but MOQ requested
❺ Insulator Color: 1 = Black
*Optional insulator color consult manufacturer
❻ Other Options:
00 = With φ3.05mm holes on shell (Standard)
A0 = Riveted #4-40 UNC Close nuts on Front shell
B0 = Riveted #4-40 UNC Open nuts on Front shell
C0 = Riveted #4-40 UNC Open nuts on Rear shell
*Special options consult manufacturer

CD03 Series High Density Straight DIP Solder D-Sub

◎ Mate with standard D-Sub
◎ With metal shell and solder contacts
◎ Options riveted Hex nuts or ground stand-off

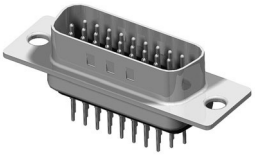

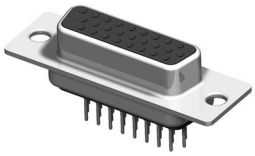

P/N	CD03**PA1**

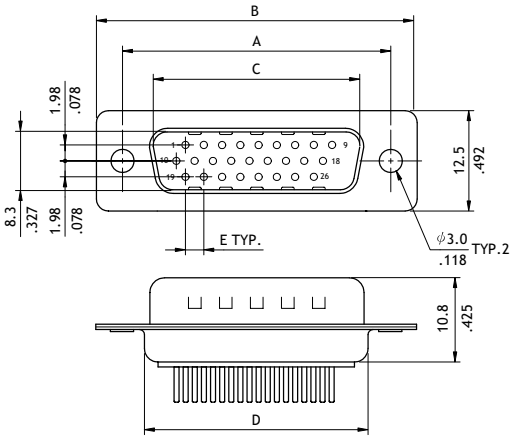

Plug Connector

Circuits	Dimension				
	A	B	C	D	E
15	25.0(.984)	30.8(1.213)	16.92(.666)	19.2(.756)	2.29(.090)
26	33.32(1.312)	39.2(1.543)	25.25(.994)	27.7(1.091)	2.29(.090)
44	47.04(1.852)	53.1(2.091)	38.96(1.534)	41.1(1.618)	2.29(.090)
62	63.5(2.500)	69.4(2.732)	55.42(2.182)	57.3(2.256)	2.41(.095)

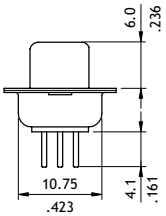

P/N	CD03**SA1**

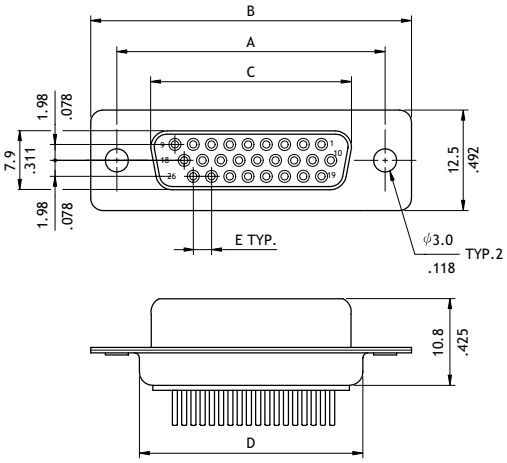

Receptacle connector

Circuits	Dimension				
	A	B	C	D	E
15	25.0(.984)	30.8(1.213)	16.3(.642)	19.2(.756)	2.29(.090)
26	33.32(1.312)	39.2(1.543)	24.6(.969)	27.7(1.091)	2.29(.090)
44	47.04(1.852)	53.1(2.091)	38.3(1.508)	41.1(1.618)	2.29(.090)
62	63.5(2.500)	69.4(2.732)	54.8(2.157)	57.3(2.256)	2.41(.095)

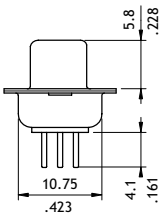

Ordering Code

❶	❷	❸	❹	❺	❻
CD03	15	P	A	1	00

❶ Series No.
❷ No. of Circuits: 15, 26, 44, 62
❸ Connector Type: P = Plug
S = Receptacle
❹ Plating Option: A = Selective Gold flash over Nickel
*Optional plating available but MOQ requested
❺ Insulator Color: 1 = Black
*Optional insulator color consult manufacturer
❻ Other Options:
00 = With ϕ3.0mm holes on shell (Standard)
B0 = Riveted #4-40 UNC Open nuts on Front shell
C0 = Riveted #4-40 UNC Open nuts on Rear shell
D0 = Riveted #4-40 UNC Ground stand-off on Rear shell
*Special options consult manufacturer

CD05 Series High Density Right Angle DIP Solder D-Sub

◎ Mate with standard D-Sub
◎ With metal shell and solder tails
◎ Riveted ground hooks or tab options

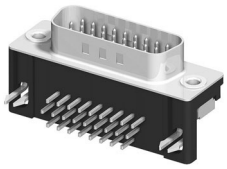

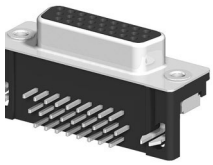

P/N	CD05**P*1**

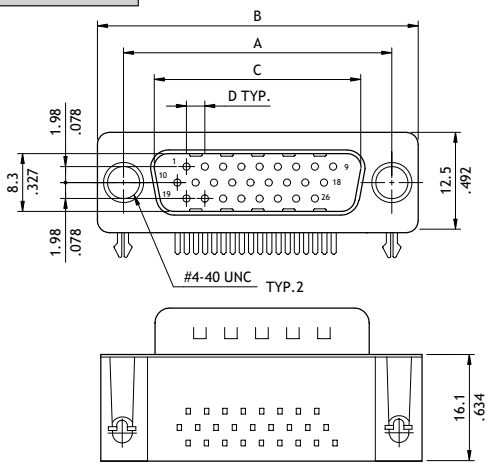

Plug Connector

Circuits	Dimension			
	A	B	C	D
15	25.0(.984)	30.8(1.213)	16.92(.666)	2.29(.090)
26	33.32(1.312)	39.2(1.543)	25.25(.994)	2.29(.090)
44	47.04(1.852)	53.1(2.091)	38.96(1.534)	2.29(.090)
62	63.5(2.500)	69.4(2.732)	55.42(2.182)	2.41(.095)

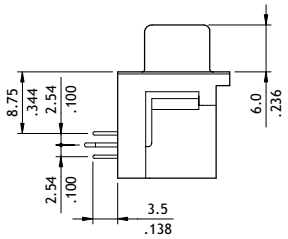

P/N	CD05**S*1**

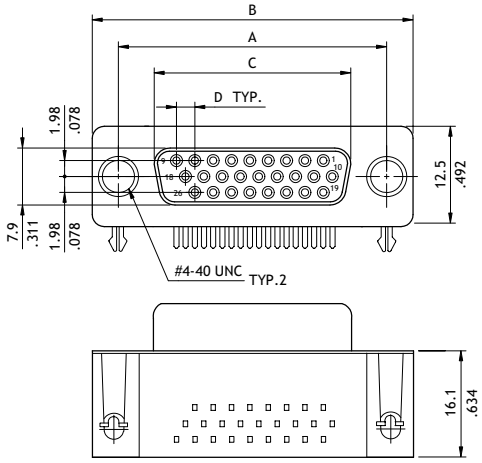

Receptacle connector

Circuits	Dimension			
	A	B	C	D
15	25.0(.984)	30.8(1.213)	16.3(.642)	2.29(.090)
26	33.32(1.312)	39.2(1.543)	24.6(.969)	2.29(.090)
44	47.04(1.852)	53.1(2.091)	38.3(1.508)	2.29(.090)
62	63.5(2.500)	69.4(2.732)	54.8(2.157)	2.41(.095)

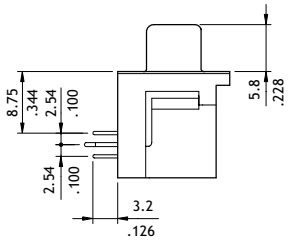

Ordering Code

❶	❷	❸	❹	❺	❻
CD05	15	P	2	1	F0

❶ Series No.
❷ No. of Circuits: 15, 26, 44, 62
❸ Connector Type: P = Plug , S = Receptacle
❹ Plating Option: 2 = Gold flash over Nickel
A = Selective Gold flash over Nickel
*Optional plating available but MOQ requested
❺ Insulator Color: 1 = Black
*Optional insulator color consult manufacturer
❻ Other Options:
F0 = Riveted ground hooks with #4-40 UNC Open (Standard)
I0 = Riveted ground tabs thread #4-40 UNC Open and ground tabs with ϕ3.2mm holes
J0 = Assmebly ground hooks by #4-40 UNC Hex screws
G0 = Riveted ground hooks pre-loaded #4-40 UNC Hex screws
*Special options consult manufacturer

CD42/44 Series Plastic Hood

Hood Introduction

◎ Low cost and easy to use for various cable assemblies
◎ Accept standard D-SUB or High Density D-SUB connector
◎ Optional cable clamps and hardware options
◎ Color code option "*"
◎ 1 = Black, 9 = Grey, 0 = Ivory, M = Metalized, D = Die-cast

RoHS Compliant

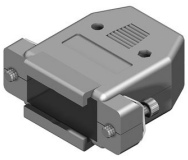

CD42 Series

CD44 Series

CD42 Series Plastic Hood

P/N CD4209H0*00

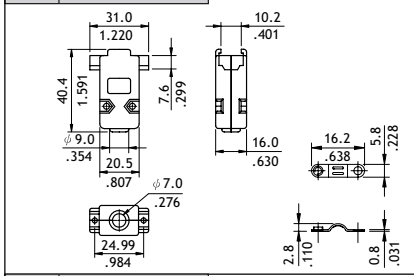

P/N CD4215H0*00

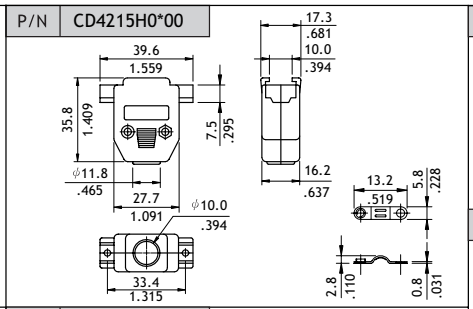

P/N CDHWE102S00

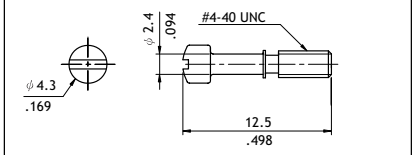

P/N CDHW0004W00

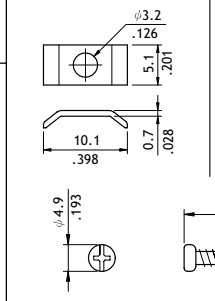

P/N CDHWE101N00

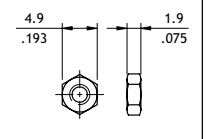

Circuits	Screw length
9	A= 8.7mm, 14.3mm
15	A= 8.7mm, 14.3mm
25	A= 8.7mm, 14.3mm
37	A= 13.0mm, 17.0mm

P/N CD4225H0*00

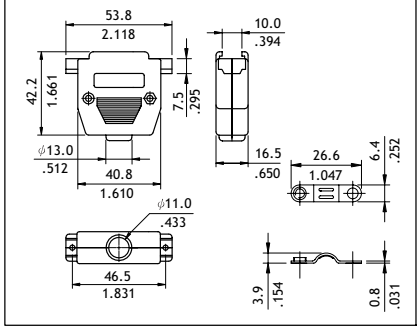

P/N CD4237H0*00

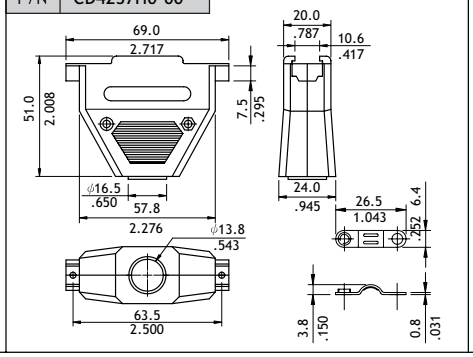

CD44 Series Plastic Hood

P/N CD4409H0*00

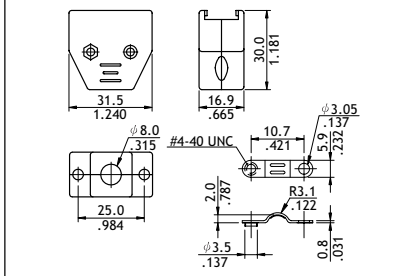

P/N CD4415H0*00

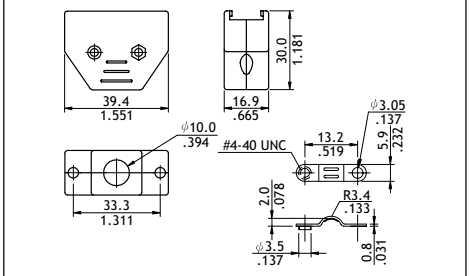

P/N CDHWE104S00

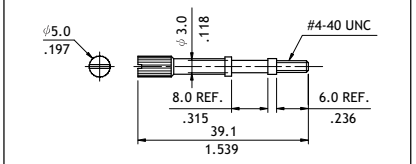

P/N CD4425H0*00

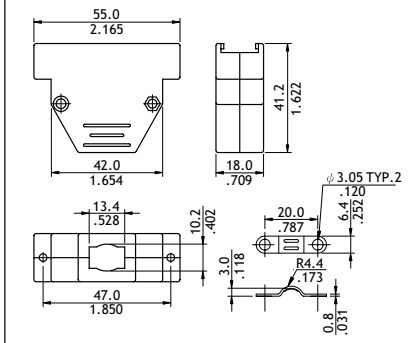

P/N CD4437H0*00

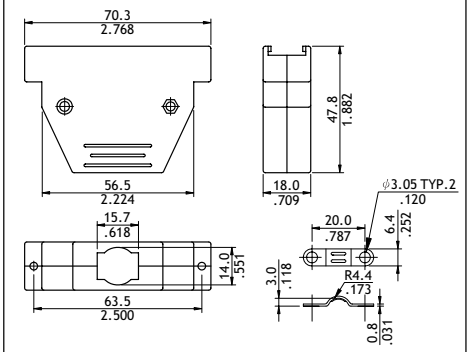

P/N CD4450H0*00

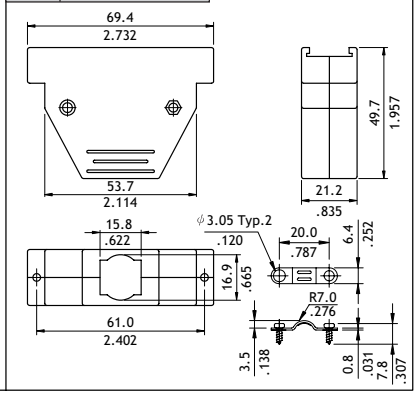

CD51 Series Solder D-Sub

◎ Mate with standard D-Sub
◎ With metal shell and solder contacts
◎ Riveted Hex nuts options available

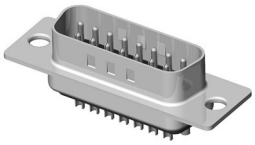

P/N	CD51**PA1**

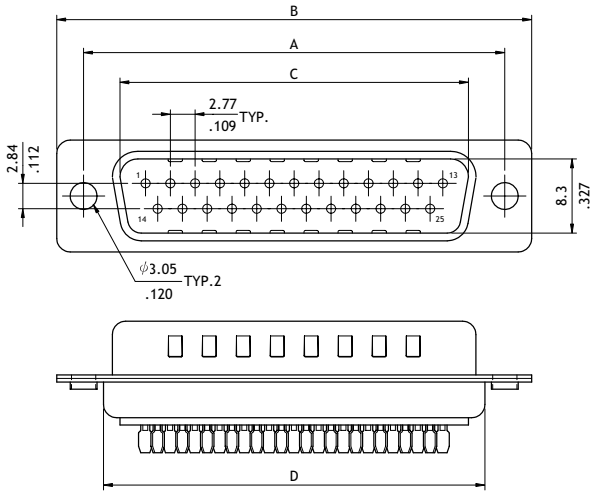

Plug Connector

Circuits	Dimension			
	A	B	C	D
9	25.0(.984)	30.8(1.213)	16.92(.666)	19.2(.756)
15	33.32(1.312)	39.2(1.543)	25.25(.994)	27.7(1.091)
25	47.04(1.852)	53.1(2.091)	38.96(1.534)	41.1(1.618)
37	63.5(2.500)	69.4(2.732)	55.42(2.182)	57.3(2.256)

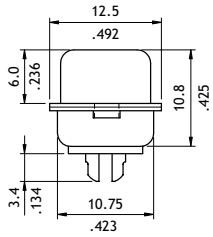

P/N	CD51**SA1**

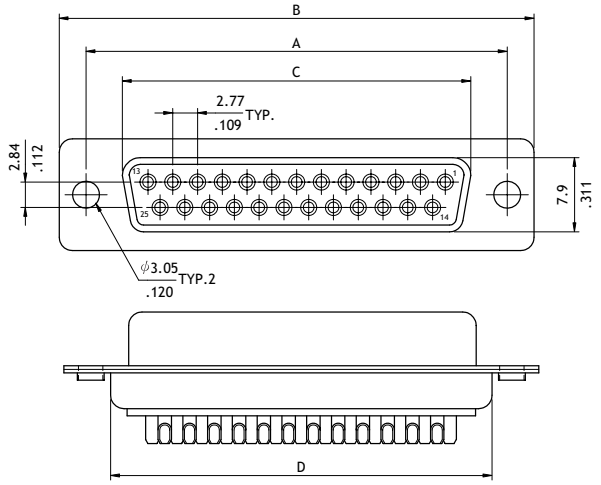

Receptacle Connector

Circuits	Dimension			
	A	B	C	D
9	25.0(.984)	30.8(1.213)	16.3(.642)	19.2(.756)
15	33.32(1.312)	39.2(1.543)	24.6(.969)	27.7(1.091)
25	47.04(1.852)	53.1(2.091)	38.3(1.508)	41.1(1.618)
37	63.5(2.500)	69.4(2.732)	54.8(2.157)	57.3(2.256)

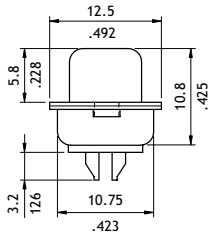

Ordering Code

❶	❷	❸	❹	❺	❻
CD51	25	P	A	1	00

❶ Series No.
❷ No. of Circuits: 09, 15, 25, 37
❸ Connector Type: P = Plug
S = Receptacle
❹ Plating Option: A = Selective Gold flash over Nickel
*Optional plating available but MOQ requested
❺ Insulator Color: 1 = Black
*Optional insulator color consult manufacturer
❻ Other Options:
00 = With ϕ3.05mm holes on shell (Standard)
A0 = Riveted #4-40 UNC Close nuts on Front shell
B0 = Riveted #4-40 UNC Open nuts on Front shell
C0 = Riveted #4-40 UNC Open nuts on Rear shell
*Special options consult manufacturer

CD52 Series Crimp Clip D-Sub

◎ Mate with standard D-Sub
◎ Riveted Hex nuts options available

P/N	CD52**P01**

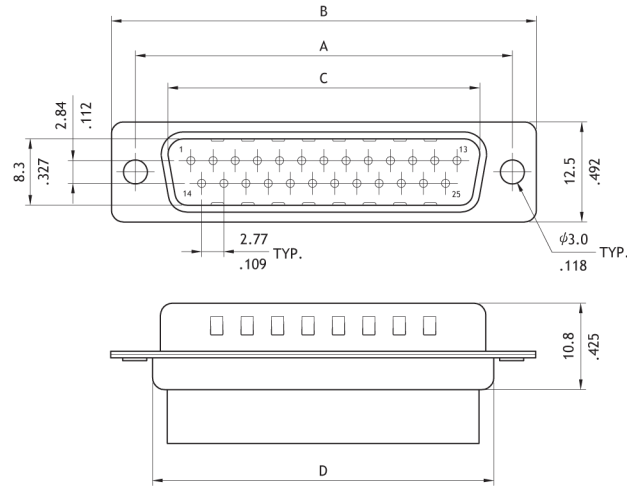

Plug Connector

Circuits	Dimension			
	A	B	C	D
9	25.0(.984)	30.8(1.213)	16.92(.666)	19.2(.756)
15	33.32(1.312)	39.2(1.543)	25.25(.994)	27.7(1.091)
25	47.04(1.852)	53.1(2.091)	38.96(1.534)	41.1(1.618)
37	63.5(2.500)	69.4(2.732)	55.42(2.182)	57.3(2.256)

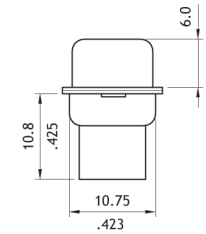

P/N	CD52**S01**

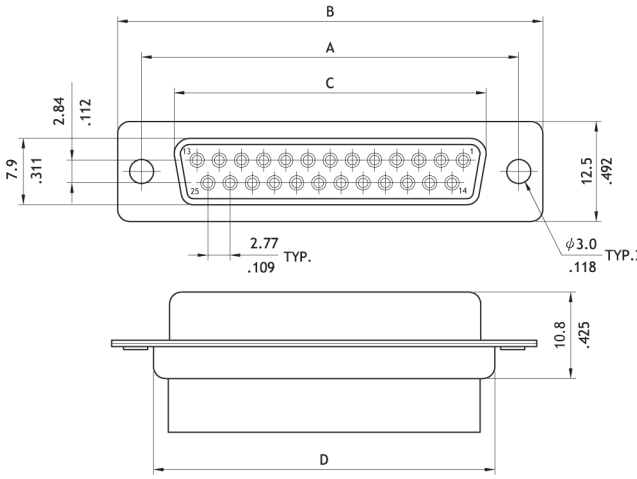

Receptacle Connector

Circuits	Dimension			
	A	B	C	D
9	25.0(.984)	30.8(1.213)	16.3(.642)	19.2(.756)
15	33.32(1.312)	39.2(1.543)	24.6(.969)	27.7(1.091)
25	47.04(1.852)	53.1(2.091)	38.3(1.508)	41.1(1.618)
37	63.5(2.500)	69.4(2.732)	54.8(2.157)	57.3(2.256)

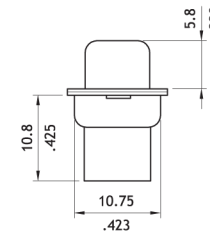

Ordering Code

❶	❷	❸	❹	❺
CD52	25	P0	1	00

❶ Series No.
❷ No. of Circuits: 09, 15, 25, 37
❸ Connector Type: P0 = Plug
S0 = Receptacle
❹ Insulator Color: 1 = Black
*Optional plating available but MOQ requested

❺ Other Options:
00 = With ϕ3.00mm holes on shell (Standard)
A0 = Riveted #4-40 UNC Close nuts on Front shell
B0 = Riveted #4-40 UNC Open nuts on Front shell
C0 = Riveted #4-40 UNC Open nuts on Rear shell
*Special options consult manufacturer

CD52 Series Crimp Clip Terminal

◎ Mate with Cvilux CD52 D-Sub
◎ Low insertion force

RoHS Compliant

P/N	CD52T01*BPP

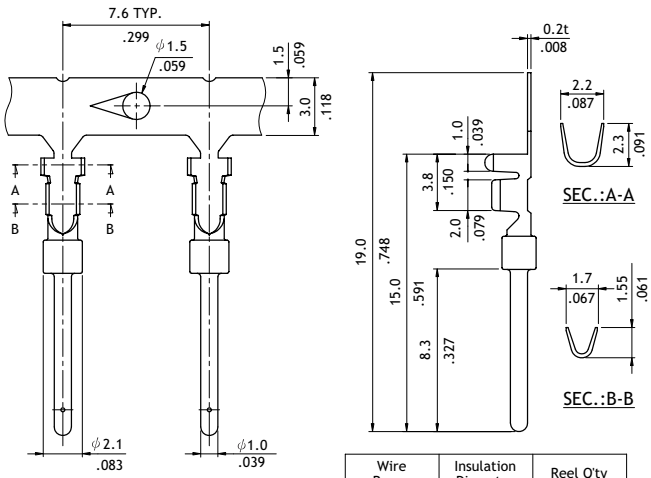

Wire Range	Insulation Diameter	Reel Q'ty
AWG #24~#28	1.45 (.057) MAX.	10,000 PCS.

P/N	CD52T02*BPP

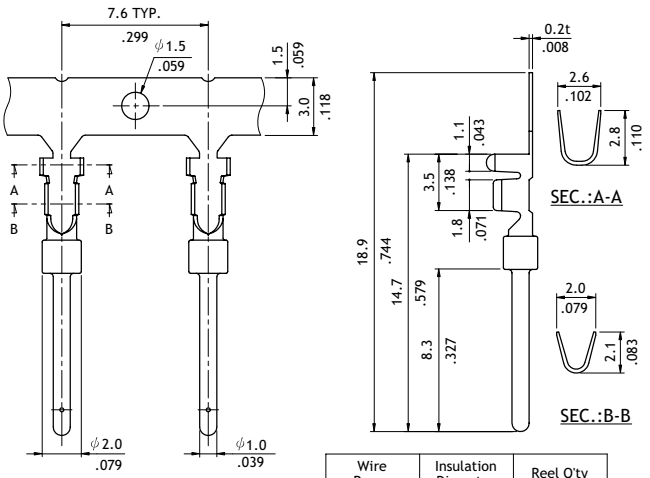

Wire Range	Insulation Diameter	Reel Q'ty
AWG #22~#24	1.6 (.063) MAX.	10,000 PCS.

P/N	CD52T01*PPS

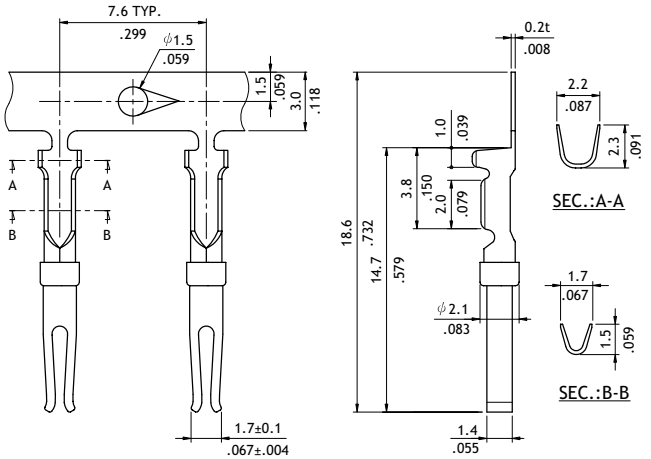

Wire Range	Insulation Diameter	Reel Q'ty
AWG #24~#28	1.45 (.057) MAX.	10,000 PCS.

P/N	CD52T02*PPS

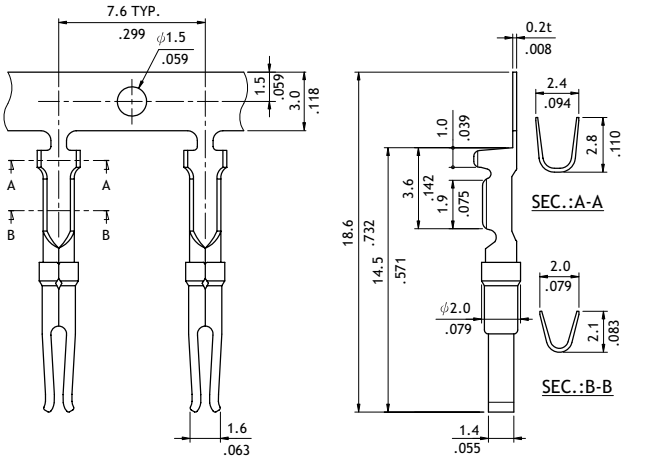

Wire Range	Insulation Diameter	Reel Q'ty
AWG #22~#24	1.6 (.063) MAX.	10,000 PCS.

Ordering Code

❶	❷	❸	❹	❺	❻
CD52	T01	A	B	P	P

❶ Series No.
❷ No. of Circuits:
T01 = for AWG #24 ~ #28
T02 = for AWG #22 ~ #24
❸ Plating Code:
A = Selective Gold flash over Nickel
*Optional plating available but MOQ requested
❹ Material: B = Brass (Plug)
P = Phosphor Bronze (Receptacle)
❺ Plating method:
P = Post-plating
❻ Type: P = Plug Terminal
S = Receptacle Terminal

CD53 Series Straight DIP Solder D-Sub

◎ Mate with standard D-Sub
◎ With metal shell and solder tails
◎ Riveted Hex nuts options available

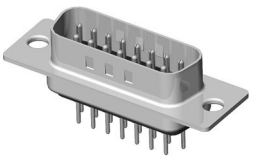

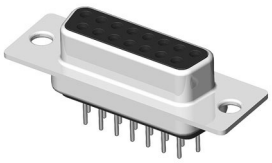

P/N	CD53**PA1**

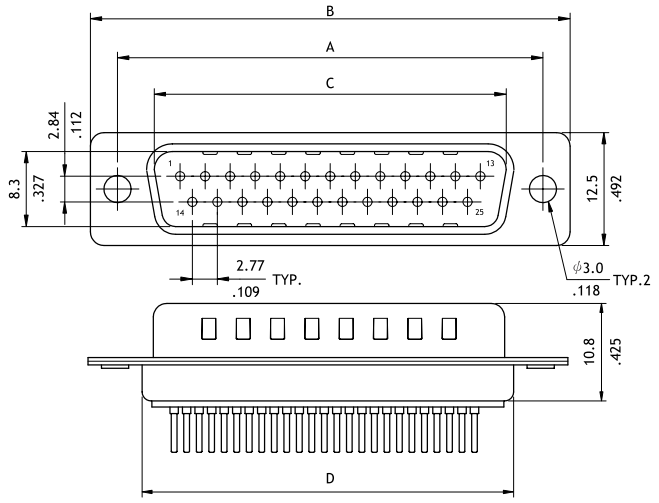

Plug Connector

Circuits	Dimension			
	A	B	C	D
9	25.0(.984)	30.8(1.213)	16.92(.666)	19.2(.756)
15	33.32(1.312)	39.2(1.543)	25.25(.994)	27.7(1.091)
25	47.04(1.852)	53.1(2.091)	38.96(1.534)	41.1(1.618)
37	63.5(2.500)	69.4(2.732)	55.42(2.182)	57.3(2.256)

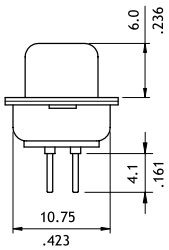

P/N	CD53**SA1**

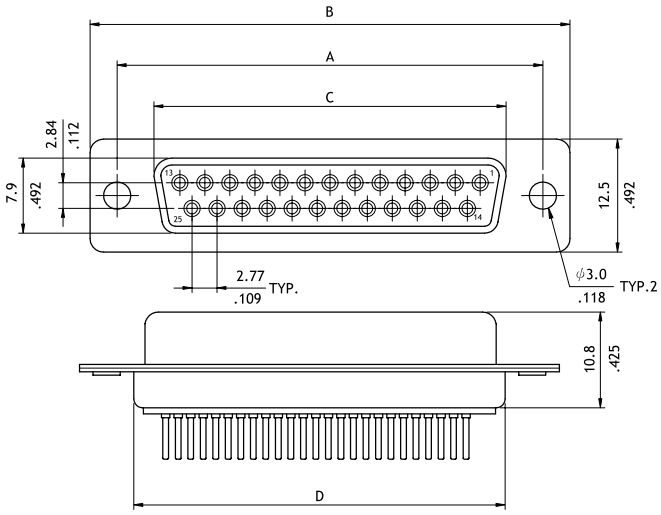

Receptacle Connector

Circuits	Dimension			
	A	B	C	D
9	25.0(.984)	30.8(1.213)	16.3(.642)	19.2(.756)
15	33.32(1.312)	39.2(1.543)	24.6(.969)	27.7(1.091)
25	47.04(1.852)	53.1(2.091)	38.3(1.508)	41.1(1.618)
37	63.5(2.500)	69.4(2.732)	54.8(2.157)	57.3(2.256)

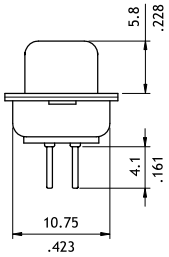

Ordering Code

❶	❷	❸	❹	❺	❻
CD53	25	P	2	1	00

❶ Series No.
❷ No. of Circuits: 09, 15, 25, 37
❸ Connector Type: P = Plug (Male)
S = Receptacle (Female)
❹ Plating Option:
2 = Gold flash over Nickel
A = Selective Gold flash over Nickel
*Optional plating available but MOQ requested
❺ Insulator Color: 1 = Black
*Optional insulator color consult manufacturer
❻ Other Options:
00 = With ϕ3.00mm holes on shell (Standard)
B0 = Riveted #4-40 UNC Open nuts on Front shell
C0 = Riveted #4-40 UNC Open nuts on Rear shell
D0 = Riveted #4-40 UNC Ground stand-off on Rear shell
*Special options consult manufacturer

CD61 Series 8.10mm Footprint Right Angle DIP Solder D-Sub

◎ Mate with standard D-Sub
◎ With metal shell and solder tails
◎ Ground hooks or ground tabs available

RoHS Compliant

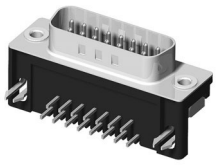

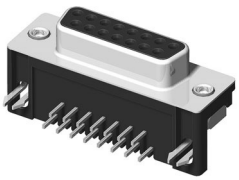

P/N	CD61**P*1**

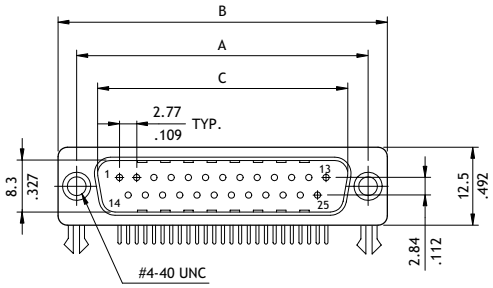

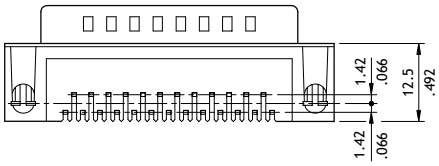

Plug Connector

Circuits	Dimension		
	A	B	C
9	25.0(.984)	30.8(1.213)	16.92(.666)
15	33.32(1.312)	39.2(1.543)	25.25(.994)
25	47.04(1.852)	53.1(2.091)	38.96(1.534)
37	63.5(2.500)	69.4(2.732)	55.42(2.182)

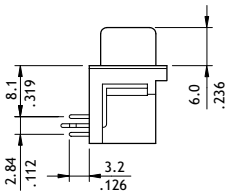

P/N	CD61**S*1**

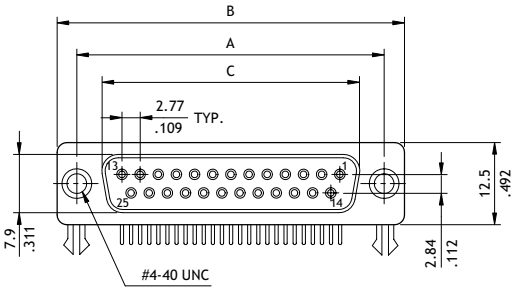

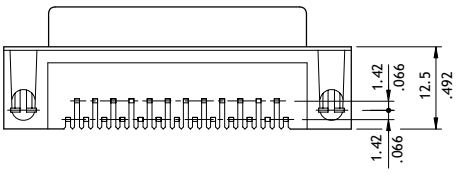

Receptacle Connector

Circuits	Dimension		
	A	B	C
9	25.0(.984)	30.8(1.213)	16.3(.642)
15	33.32(1.312)	39.2(1.543)	24.6(.969)
25	47.04(1.852)	53.1(2.091)	38.3(1.508)
37	63.5(2.500)	69.4(2.732)	54.8(2.157)

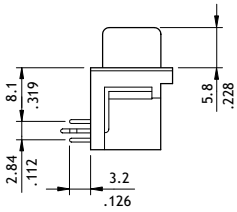

Ordering Code

❶ ❷ ❸ ❹ ❺ ❻
CD61 25 P 2 1 F0

❶ Series No.
❷ No. of Circuits: 09, 15, 25, 37
❸ Connector Type: P = Plug
S = Receptacle
❹ Plating Option:
2 = Gold flash over Nickel
A = Selective Gold flash over Nickel
*Optional plating available but MOQ requested
❺ Insulator Color: 1 = Black
❻ Other Options:
F0 = Riveted ground hooks with #4-40 UNC Open (Standard)
J0 = Assembly ground hooks by #4-40 UNC Hex screws
G0 = Riveted ground hooks pre-loaded #4-40 UNC Hex screws
*Special options consult manufacturer

CD62 Series 8.10mm Footprint EMI Right Angle DIP Solder D-Sub

◎ Mate with standard D-Sub
◎ With ferrite core
◎ Optional ground hooks or ground tabs

RoHS Compliant

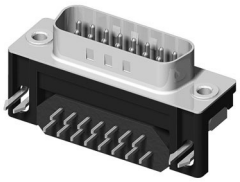

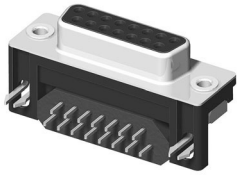

P/N	CD62**P*1**

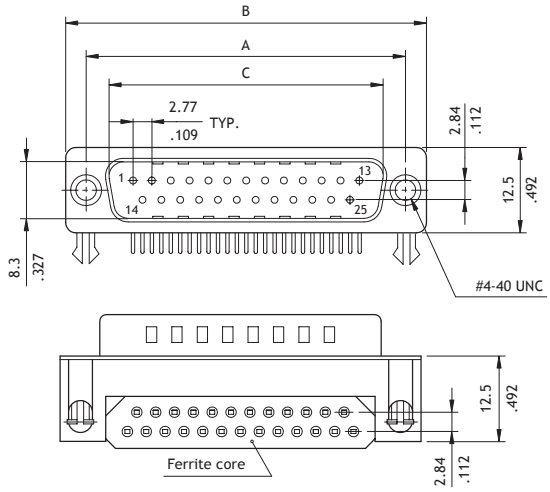

Plug Connector

Circuits	Dimension		
	A	B	C
9	25.0(.984)	30.8(1.213)	16.92(.666)
15	33.32(1.312)	39.2(1.543)	25.25(.994)
25	47.04(1.852)	53.1(2.087)	38.96(1.534)
37	63.5(2.500)	69.4(2.732)	55.42(2.182)

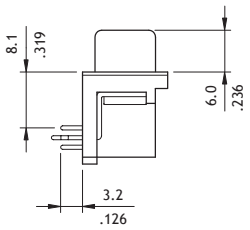

P/N	CD62**S*1**

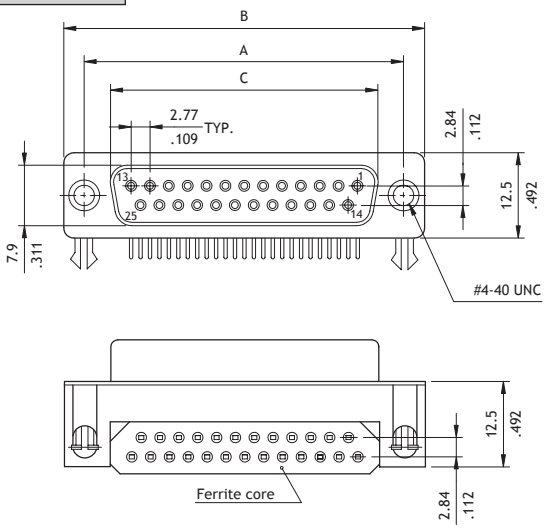

Receptacle Connector

Circuits	Dimension		
	A	B	C
9	25.0(.984)	30.8(1.213)	16.3(.642)
15	33.32(1.312)	39.2(1.543)	24.6(.969)
25	47.04(1.852)	53.1(2.091)	38.3(1.508)
37	63.5(2.500)	69.4(2.732)	54.8(2.157)

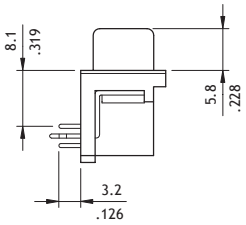

Ordering Code

❶	❷	❸	❹	❺	❻
CD62	25	P	2	1	F0

❶ Series No.
❷ No. of Circuits: 09, 15, 25, 37
❸ Connector Type: P = Plug
S = Receptacle
❹ Plating Option: 2 = Gold flash over Nickel
A = Selective Gold flash over Nickel
*Optional plating available but MOQ requested
❺ Insulator Color: 1 = Black

❻ Other Options:
F0 = Riveted ground hooks with #4-40 UNC Open (Standard)
I0 = Riveted ground tabs thread #4-40 UNC Open and ground tabs with φ3.2mm holes
J0 = Assembly ground hooks by #4-40 UNC Hex screws
G0 = Riveted ground hooks pre-loaded #4-40 UNC Hex screws
*Special options consult manufacturer

CD91 Series Flat Cable - IDC D-Sub

◎ Mate with standard D-Sub and CW03 Flat Ribbon Cable
◎ ϕ3.4mm holes or riveted buts insert available

RoHS Compliant

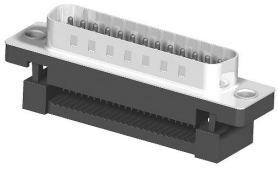
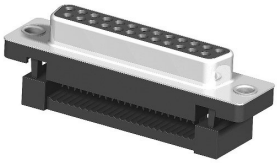

P/N	CD91**PA***

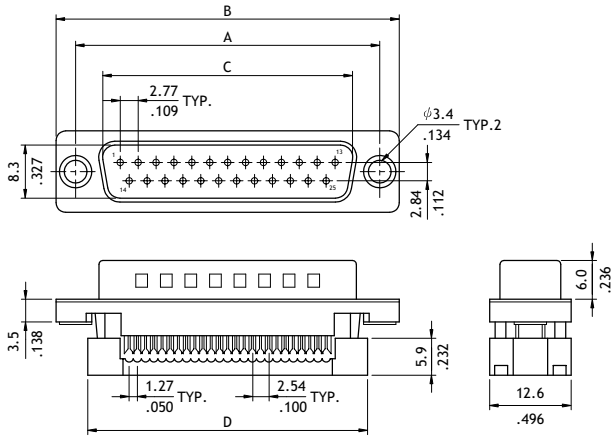

Plug Connector

Circuits	Dimension				
	A	B	C	D	E
9	25.0(.984)	30.8(1.213)	16.92(.666)	22.4(.882)	12.08(.476)
15	33.3(1.311)	39.2(1.543)	25.25(.994)	30.8(1.213)	19.7(.776)
25	47.1(1.854)	53.1(2.091)	38.96(1.534)	44.5(1.752)	32.4(1.276)
37	63.5(2.500)	69.4(2.732)	55.42(2.182)	61.4(2.417)	47.72(1.879)

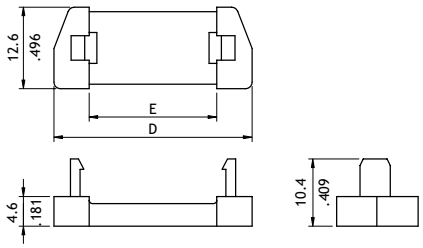

Strain relief

P/N	CD91**SA***

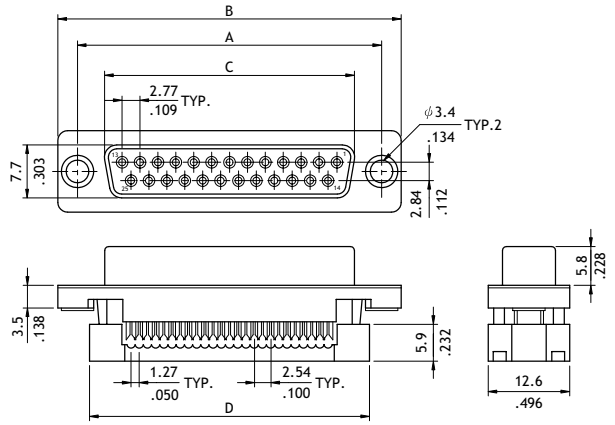

Receptacle Connector

Circuits	Dimension				
	A	B	C	D	E
9	25.0(.984)	30.8(1.213)	16.3(.642)	22.4(.882)	12.08(.476)
15	33.3(1.311)	39.2(1.543)	24.6(.969)	30.8(1.213)	19.7(.776)
25	47.1(1.854)	53.1(2.091)	38.3(1.508)	44.5(1.752)	32.4(1.276)
37	63.5(2.500)	69.4(2.732)	54.8(2.157)	61.4(2.417)	47.72(1.879)

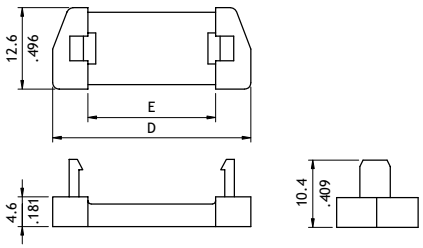

Strain relief

Ordering Code

❶	❷	❸	❹	❺	❻
CD91	25	P	A	1	S0

❶ Series No.
❷ No.of Circuits: 9,15,25,37
❸ Connector Type: P = Plug
S = Receptacle
❹ Plating Code: A = Selective Gold Flash over Nickel
*Optional plating available but MOQ requested
❺ Insulator Color: 1 = Black
7 = Blue
❻ Other Options:
S0 = Metal shell with ϕ3.4mm holes with S/R (Standard)
S1 = Metal shell #4-40 UNC insert nuts with S/R
*Special options consult manufacturer

CD81 Series Stacked Right Angle DIP Solder D-Sub

- ◎ Mate with standard D-Sub
- ◎ With metal shell and solder tails
- ◎ Optional row spacing and position
- ◎ In various pin configuration

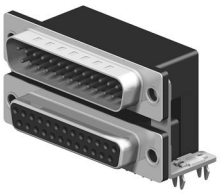

P/N	CD81V*PPA**

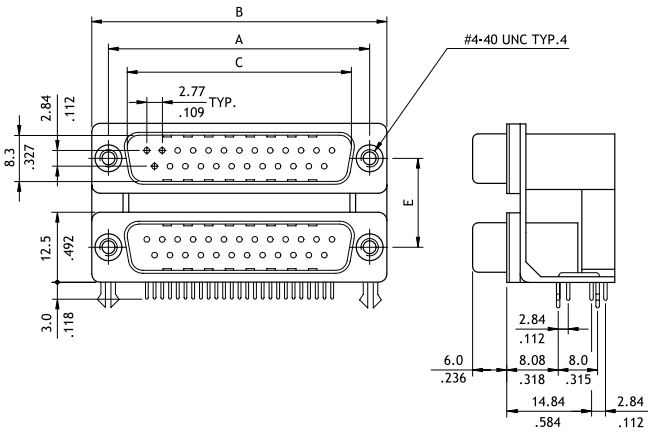

CVILUX P/N	Dimension				
	A	B	C	D	E
CD81V1P**A*	25.0(.984)	30.8(1.213)	16.92(.666)	16.3(.642)	15.88(.625)
CD81V2P**A*	33.32(1.312)	39.2(1.543)	25.25(.994)	24.6(.969)	
CD81V3P**A*	47.04(1.852)	53.1(2.091)	38.96(1.534)	38.3(1.508)	
CD81V7P**A*	63.5(2.500)	69.4(2.732)	55.42(2.182)	54.8(2.157)	
CD81V1P**B*	25.0(.984)	30.8(1.213)	16.92(.666)	16.3(.642)	19.05(.750)
CD81V2P**B*	33.32(1.312)	39.2(1.543)	25.25(.994)	24.6(.969)	
CD81V3P**B*	47.04(1.852)	53.1(2.091)	38.96(1.534)	38.3(1.508)	
CD81V7P**B*	63.5(2.500)	69.4(2.732)	55.42(2.182)	54.8(2.157)	
CD81V1P**C*	25.0(.984)	30.8(1.213)	16.92(.666)	16.3(.642)	22.86(.900)
CD81V2P**C*	33.32(1.312)	39.2(1.543)	25.25(.994)	24.6(.969)	
CD81V3P**C*	47.04(1.852)	53.1(2.091)	38.96(1.534)	38.30(1.508)	
CD81V7P**C*	63.5(2.500)	69.4(2.732)	55.42(2.182)	54.8(2.157)	

P/N	CD81V*PSA**

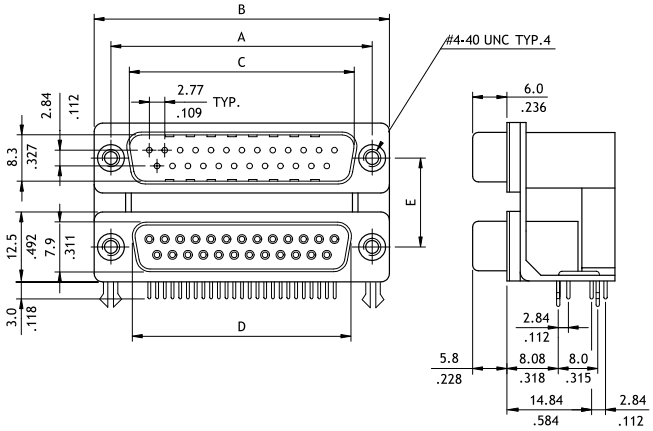

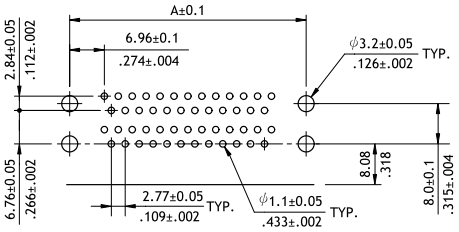

Recommended P.C. Board Layout

Ordering Code

❶	❷	❸	❹	❺	❻
CD81	V1	PP	A	A	C

❶ Series No.

❷ Contacts configuration:
V1 = 9 to 9, V2 = 15 to 15
V3 = 25 to 25, V4 = 9 to 25
V5 = 25 to 9, V6 = 25 to 15
V7 = 37 to 37

❸ Connector Type: PP = Plug to plug
PS = Plug to receptacle

❹ Plating Options: A = Selective Gold flash over Nickel
*Optional plating available but MOQ requested

❺ Insulator Color: A: DIM.E = 15.88mm, B: DIM.E = 19.05mm
C: DIM.E = 22.86mm

❻ Other Options:
C = Riveted ground hooks with #4-40 UNC open (Standard0
S = Riveted ground hooks pre-loaded #4-40 UNC Hex screws
*Special options consult manufacturer

CD81 Series Stacked Right Angle DIP Solder D-Sub

- ◎ Mate with standard D-Sub
- ◎ With metal shell and solder tails
- ◎ Optional row spacing and position
- ◎ In various pin configuration

P/N	CD81V*SSA**

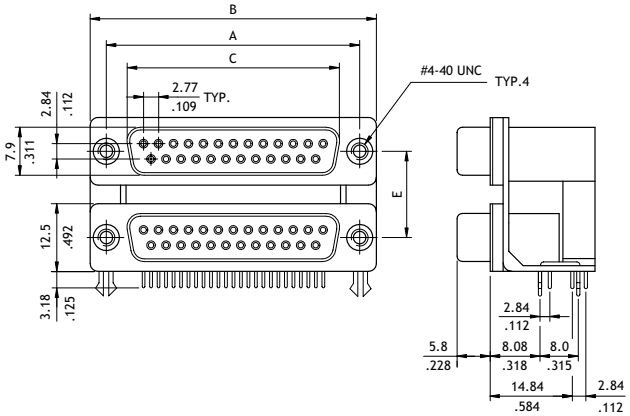

CVILUX P/N	Dimension				
	A	B	C	D	E
CD81V1S**A*	25.0(.984)	30.8(1.213)	16.3(.642)	16.92(.666)	15.88(.625)
CD81V2S**A*	33.32(1.312)	39.2(1.543)	24.6(.969)	25.25(.994)	
CD81V3S**A*	47.04(1.852)	53.1(2.091)	38.3(1.508)	38.96(1.534)	
CD81V7S**A*	63.5(2.500)	69.4(2.732)	54.8(2.157)	55.42(2.182)	
CD81V1S**B*	25.0(.984)	30.8(1.213)	16.3(.642)	16.92(.666)	19.05(.750)
CD81V2S**B*	33.32(1.312)	39.2(1.543)	24.6(.969)	25.25(.994)	
CD81V3S**B*	47.04(1.852)	53.1(2.091)	38.3(1.508)	38.96(1.534)	
CD81V7S**B*	63.5(2.500)	69.4(2.732)	54.8(2.157)	55.42(2.182)	
CD81V1S**C*	25.0(.984)	30.8(1.213)	16.3(.642)	16.92(.666)	22.86(.900)
CD81V2S**C*	33.32(1.312)	39.2(1.543)	24.6(.969)	25.25(.994)	
CD81V3S**C*	47.04(1.852)	53.1(2.091)	38.3(1.508)	38.96(1.534)	
CD81V7S**C*	63.5(2.500)	69.4(2.732)	54.8(2.157)	55.42(2.182)	

P/N	CD81V*SPA**

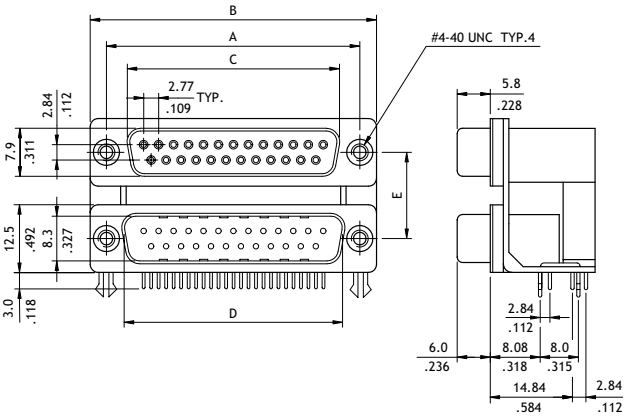

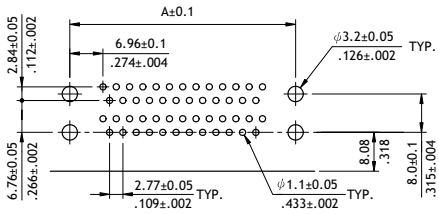

Recommended P.C. Board Layout

Ordering Code

❶	❷	❸	❹	❺	❻
CD81	V1	SS	A	A	C

❶ Series No.

❷ Contacts configuration:
V1 = 9 to 9, V2 = 15 to 15
V3 = 25 to 25, V4 = 9 to 25
V5 = 25 to 9, V6 = 25 to 15
V7 = 37 to 37

❸ Connector Type: SS = Receptacle to receptacle
SP = Receptacle to plug

❹ Plating Options: A = Selective Gold flash over Nickel
*Optional plating available but MOQ requested

❺ Insulator Color: A: DIM.E = 15.88mm, B: DIM.E = 19.05mm
C: DIM.E = 22.86mm

❻ Other Options:
C = Riveted ground hooks with #4-40 UNC open (Standard0
S = Riveted ground hooks pre-loaded #4-40 UNC Hex screws
*Special options consult manufacturer

CD71 Series Machined Contact Solder Cup D-Sub

◎ Mate with standard D-Sub
◎ With metal shell and solder tails
◎ Riveted Hex nuts or hardware accessories options available

RoHS Compliant

Plug Connector (00 Type)

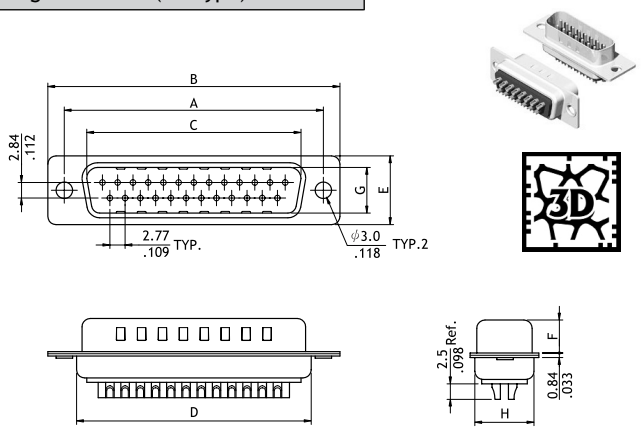

Receptacle Connector (00 Type)

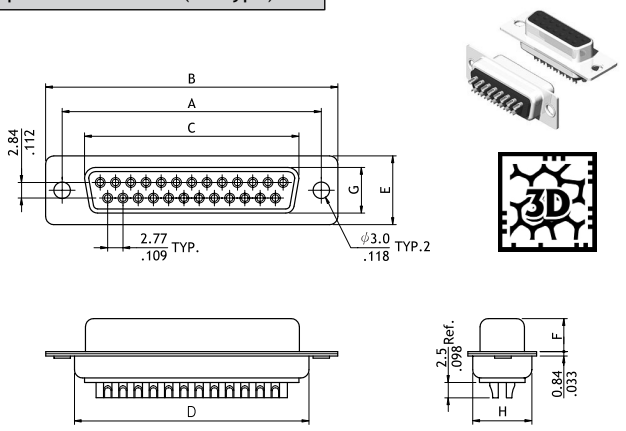

Plug Connector (A0/A1 Type)

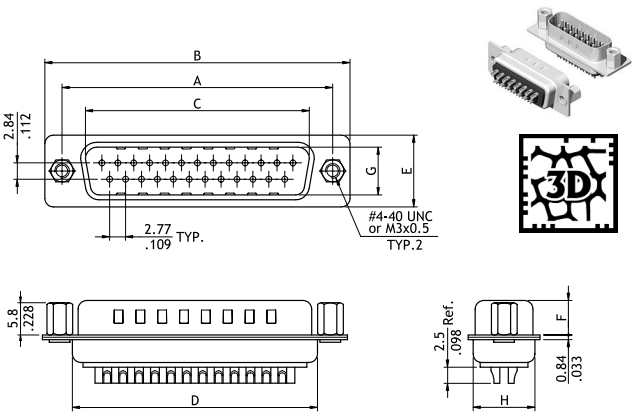

Receptacle Connector (A0/A1 Type)

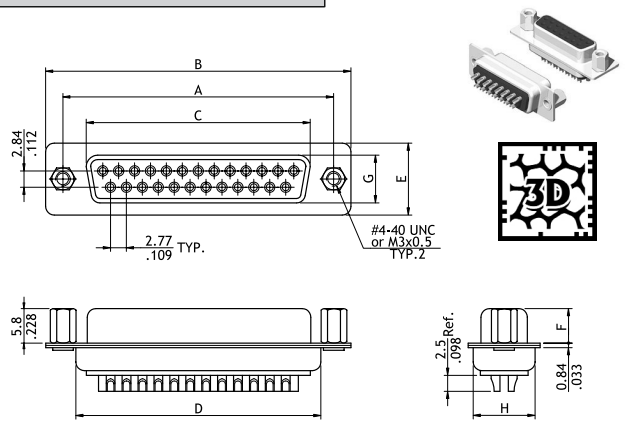

Plug Connector (B0/B1 Type)

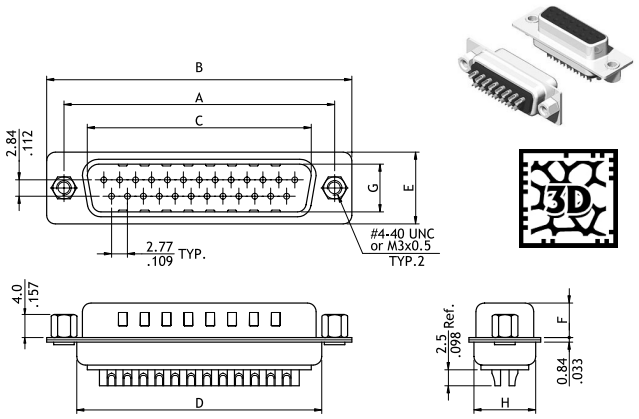

Receptacle Connector (B0/B1 Type)

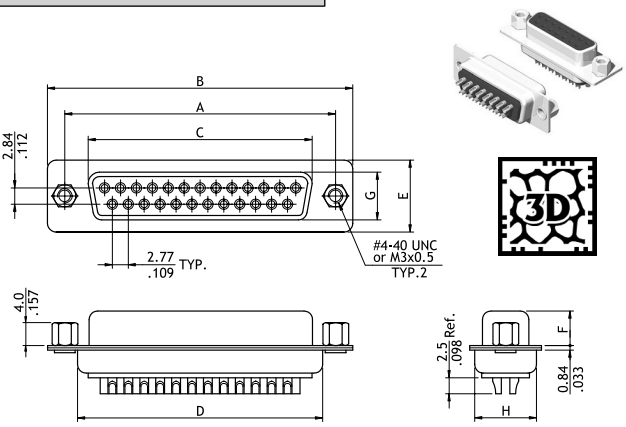

CD71 Series Machined Contact Solder Cup D-Sub

Plug Connector (C0/C1 Type)

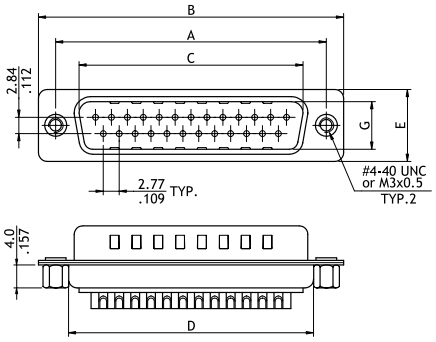

Receptacle Connector (C0/C1 Type)

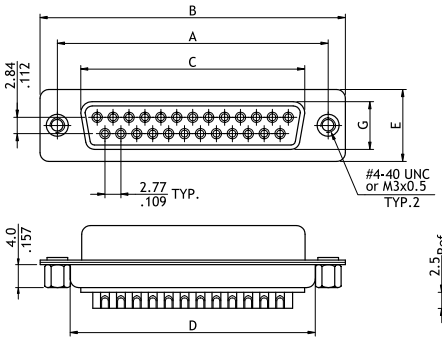

Plug Connector (K0/K1 Type)

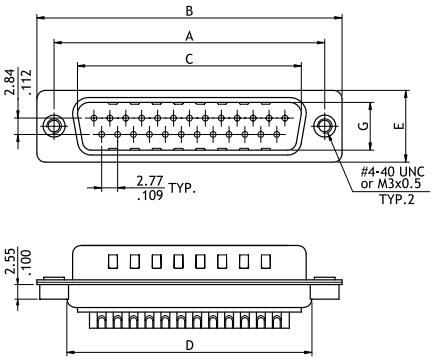

Receptacle Connector (K0/K1 Type)

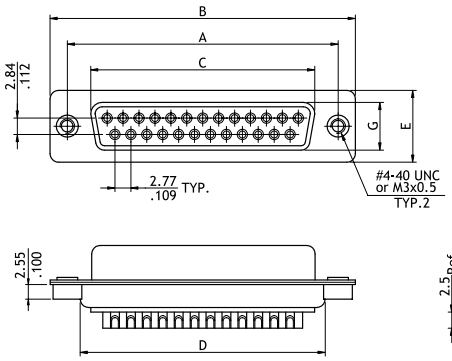

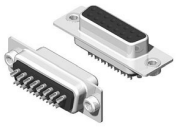

Circuits	Connector Type	Dimension							
		A	B	C	D	E	F	G	H
9	Plug	25.0(.984)	30.8(1.213)	16.92(.666)	19.2(.756)	12.5(.492)	6.0(.236)	8.3(.327)	10.75(.423)
	Receptacle	25.0(.984)	30.8(1.213)	16.30(.642)	19.2(.756)	12.5(.492)	5.8(.228)	7.9(.311)	10.75(.423)
15	Plug	33.32(1.312)	39.2(1.543)	25.25(.994)	27.6(1.087)	12.5(.492)	6.0(.236)	8.3(.327)	10.75(.423)
	Receptacle	33.32(1.312)	39.2(1.543)	24.6(.969)	27.6(1.087)	12.5(.492)	5.8(.228)	7.9(.311)	10.75(.423)
25	Plug	47.04(1.852)	53.1(2.091)	38.96(1.534)	41.1(1.618)	12.5(.492)	6.0(.236)	8.3(.327)	10.75(.423)
	Receptacle	47.04(1.852)	53.1(2.091)	38.3(1.508)	41.1(1.618)	12.5(.492)	5.8(.228)	7.9(.311)	10.75(.423)
37	Plug	63.5(2.500)	69.4(2.732)	55.42(2.182)	57.3(2.256)	12.5(.492)	6.0(.236)	8.3(.327)	10.75(.423)
	Receptacle	63.5(2.500)	69.4(2.732)	54.80(2.157)	57.3(2.256)	12.5(.492)	5.8(.228)	7.9(.311)	10.75(.423)
50	Plug	61.0(2.242)	69.4(2.732)	52.81(2.079)	55.0(2.169)	15.3(.602)	6.0(.236)	11.1(.473)	13.35(.526)
	Receptacle	61.0(2.242)	69.4(2.732)	52.2(2.055)	55.0(2.169)	15.3(.602)	5.8(.228)	10.9(.429)	13.35(.526)

Ordering Code

❶	❷	❸	❹	❺	❻
CD71	25	P	2	1	00

❶ Series No.

❷ No. of Circuits: 09, 15, 25, 37, 50

❸ Connector Type: P = Plug (Male)
S = Receptacle (Female)

❹ Plating Option: A = Selective Gold flash over Nickel
*Optional plating available but MOQ requested

❺ Insulator Color: 1 = Black
*Optional insulator color consult manufacturer

❻ Other Options:
00 = With ϕ3.0mm holes on shell (Standard)
A0 = Riveted #4-40 UNC Close nuts on Front shell
A1 = Riveted M3x0.5 Close nuts on Front shell
B0 = Riveted #4-40 UNC Open nuts on Front shell
B1 = Riveted M3x0.5 Open nuts on Front shell
C0 = Riveted #4-40 UNC Open nuts on Rear shell
C1 = Riveted M3x0.5 Open nuts on Rear shell
K0 = Riveted #4-40 UNC Open nuts on Rear shell
K1 = Riveted M3x0.5 Open nuts on Rear shell
*Special options consult manufacturer

CD72 Series Machined Contact Straight DIP Solder D-Sub

◎ Mate with standard D-Sub
◎ With metal shell and solder tails
◎ Riveted Hex nuts or hardware accessories options available

RoHS Compliant

Plug Connector (00 Type)

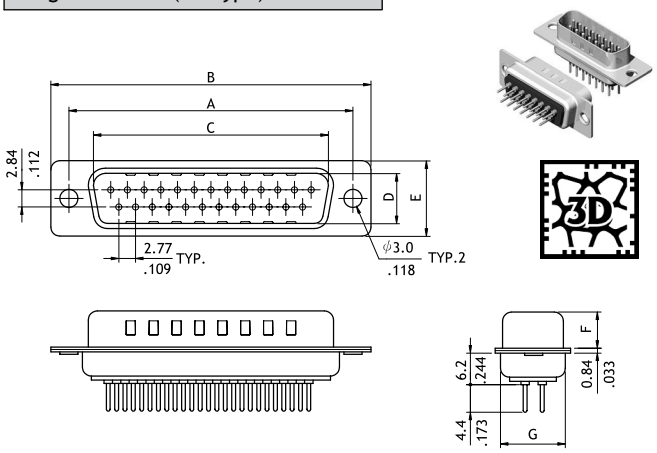

Receptacle Connector (00 Type)

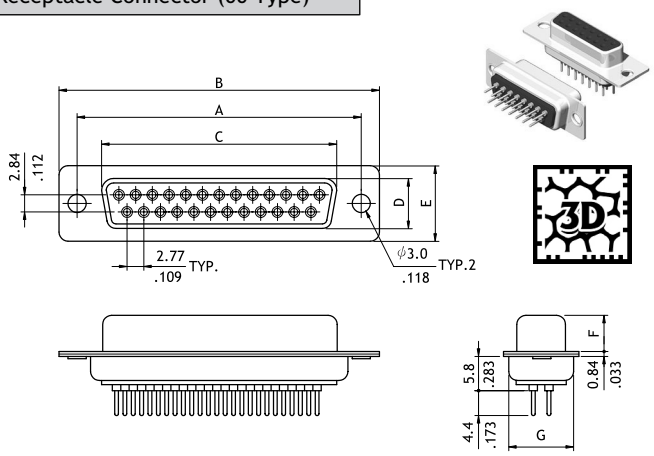

Plug Connector (A0/A1 Type)

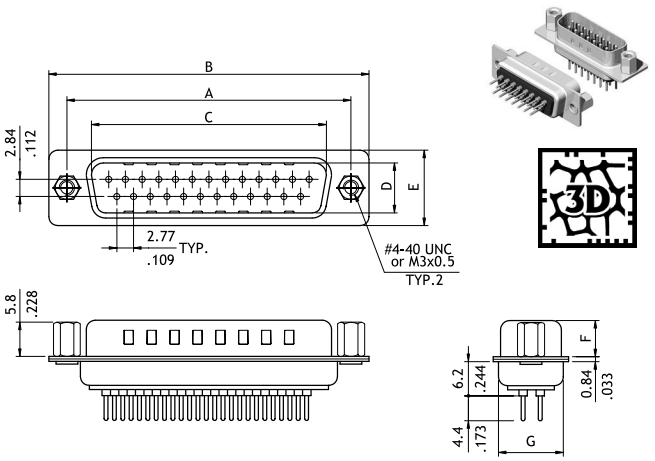

Receptacle Connector (A0/A1 Type)

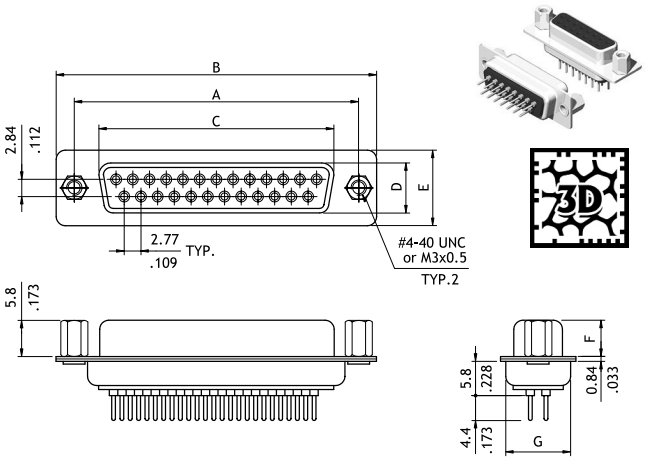

Plug Connector (B0/B1 Type)

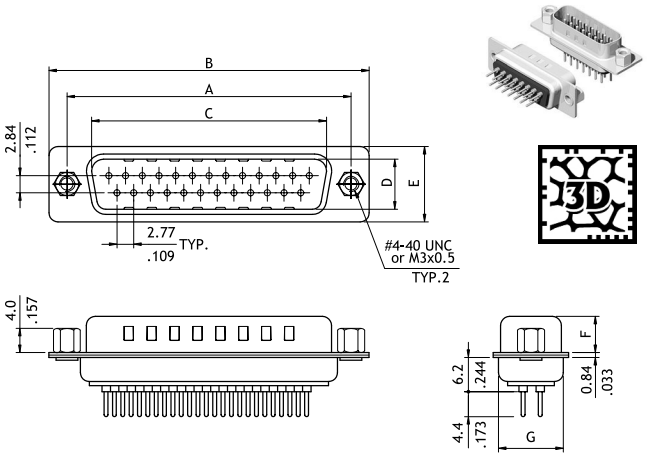

Receptacle Connector (B0/B1 Type)

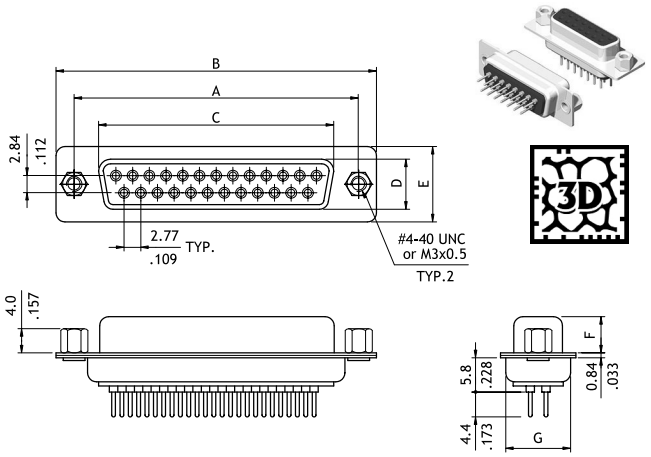

CD72 Series Machined Contact Straight DIP Solder D-Sub

Plug Connector (C0/C1 Type)

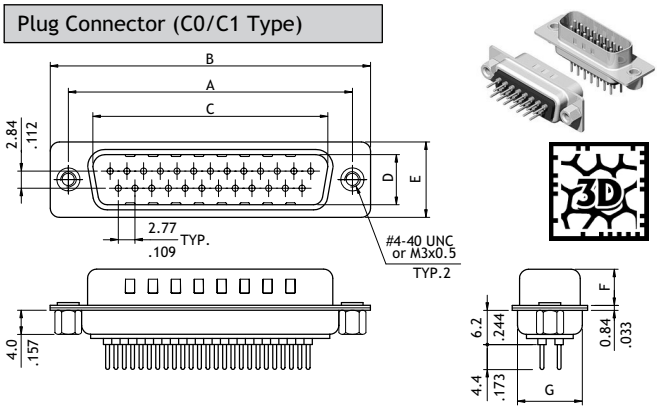

Receptacle Connector (C0/C1 Type)

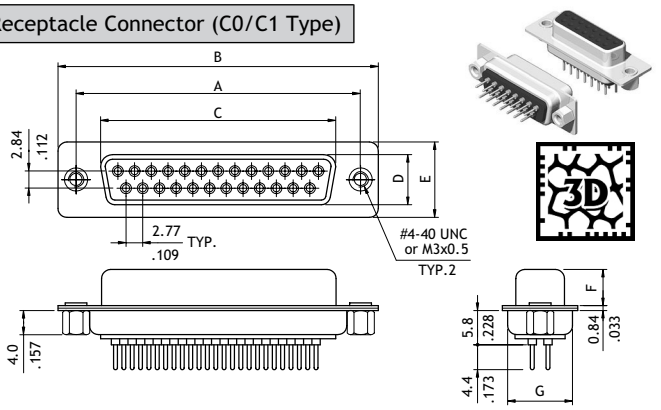

Plug Connector (D3/D4 Type)

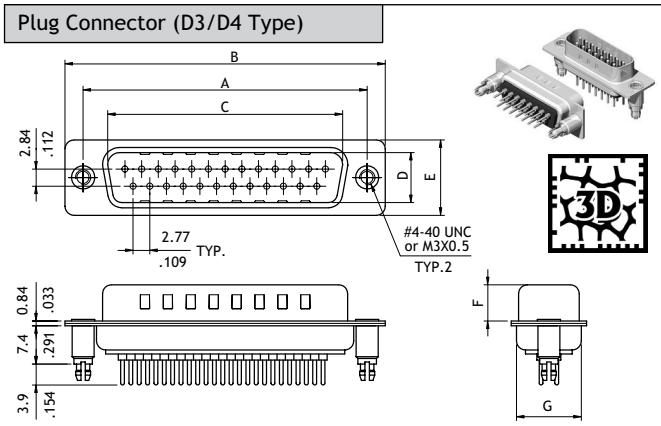

Receptacle Connector (D3/D4 Type)

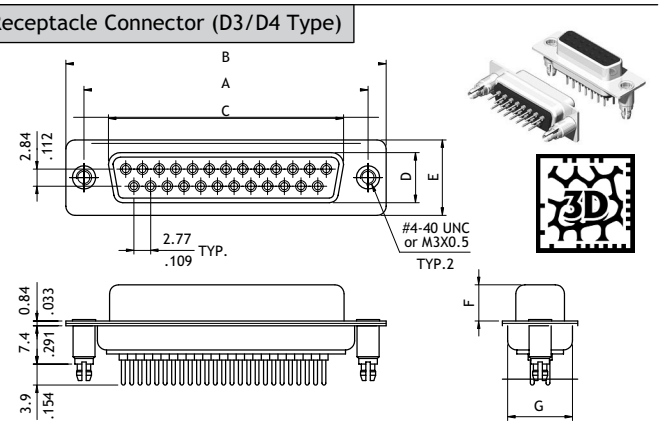

Circuits	Connector Type	Dimension						
		A	B	C	D	EF		G
9	Plug	25.0(.984)	30.8(1.213)	16.92(.666)	8.3(.327)	12.5(.492)	6.0(.236)	10.75(.423)
	Receptacle	25.0(.984)	30.8(1.213)	16.3(.642)	7.9(.311)	12.5(.492)	5.8(.228)	10.75(.423)
15	Plug	33.32(1.312)	39.2(1.543)	25.25(.994)	8.3(.327)	12.5(.492)	6.0(.236)	10.75(.423)
	Receptacle	33.32(1.312)	39.2(1.543)	24.6(.969)	7.9(.311)	12.5(.492)	5.8(.228)	10.75(.423)
25	Plug	47.04(1.852)	53.1(2.091)	38.96(1.534)	8.3(.327)	12.5(.492)	6.0(.236)	10.75(.423)
	Receptacle	47.04(1.852)	53.1(2.091)	38.3(1.508)	7.9(.311)	12.5(.492)	5.8(.228)	10.75(.423)
37	Plug	63.5(2.500)	69.4(2.732)	55.42(2.182)	8.3(.327)	12.5(.492)	6.0(.236)	10.75(.423)
	Receptacle	63.5(2.500)	69.4(2.732)	54.8(2.157)	7.9(.311)	12.5(.492)	5.8(.228)	10.75(.423)
50	Plug	61.0(2.402)	67.0(2.638)	52.8(2.079)	11.1(.473)	15.3(.602)	6.0(.236)	13.35(.526)
	Receptacle	61.0(2.402)	67.0(2.638)	52.2(2.055)	10.9(.429)	15.3(.602)	5.8(.228)	13.55(.526)

Ordering Code

❶	❷	❸	❹	❺	❻
CD72	25	P	2	1	00

❶ Series No.
❷ No. of Circuits: 09, 15, 25, 37, 50
❸ Connector Type: P = Plug (Male)
S = Receptacle (Female)
❹ Plating Option: A = Selective Gold flash over Nickel
*Optional plating available but MOQ requested
❺ Insulator Color: 1 = Black
*Optional insulator color consult manufacturer

❻ Other Options:
00 = With ϕ3.0mm holes on shell (Standard)
A0 = Riveted #4-40 UNC Close nuts on Front shell
A1 = Riveted M3x0.5 Close nuts on Front shell
B0 = Riveted #4-40 UNC Open nuts on Front shell
B1 = Riveted M3x0.5 Open nuts on Front shell
C0 = Riveted #4-40 UNC Open nuts on Rear shell
C1 = Riveted M3x0.5 Open nuts on Rear shell
D3 = Riveted #4-40 UNC Close ground stand-off on Rear shell
D4 = Riveted M3x0.5 Close ground stand-off on Rear shell
*Special options consult manufacturer

CD73 Series 8.10mm Footprint Right Angle DIP Solder D-Sub

◎ Machined contact with right angle solder tails
◎ Mate with standard D-Sub
◎ Metal shell and solder tails
◎ Riveted Hex nuts or hard ware accessories options available

RoHS Compliant

Plug Connector (00 Type)

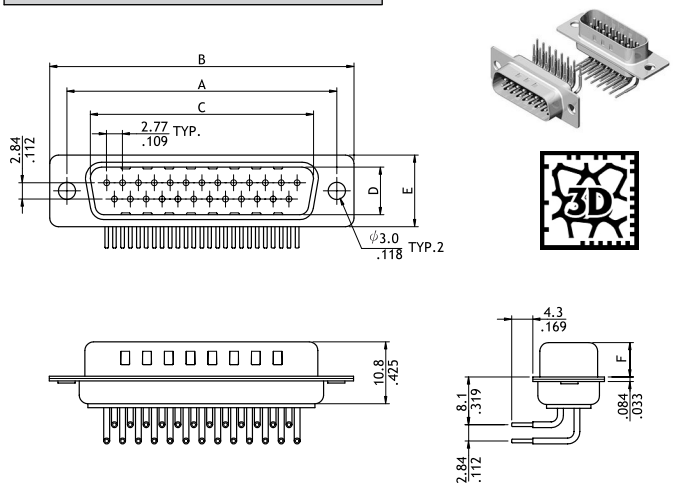

Receptacle Connector (00 Type)

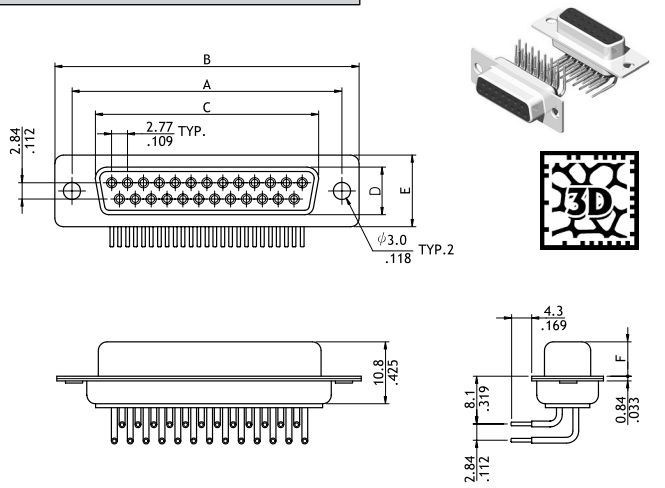

Plug Connector (I0/I2 Type)

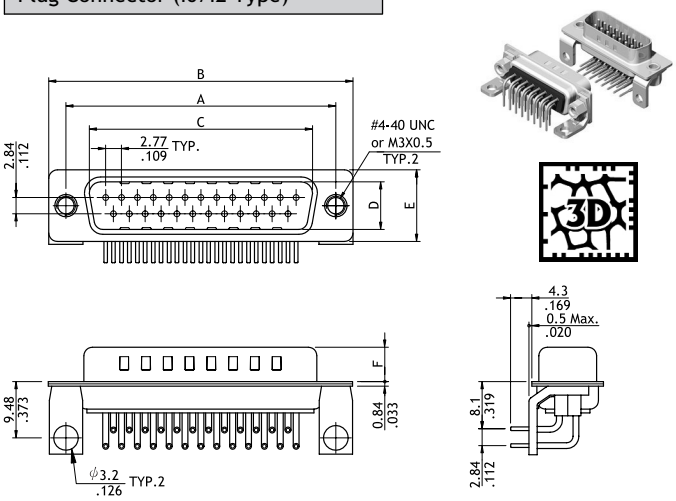

Receptacle Connector (I0/I2 Type)

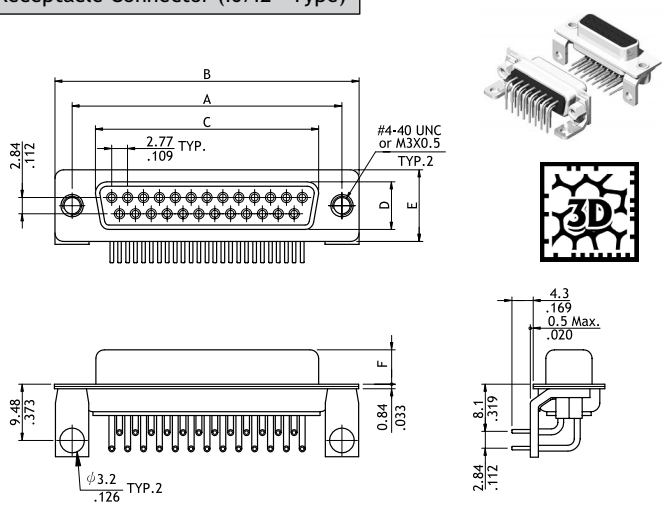

CD73 Series 8.10mm Footprint Right Angle DIP Solder D-Sub

Plug Connector (I1/I3 Type)

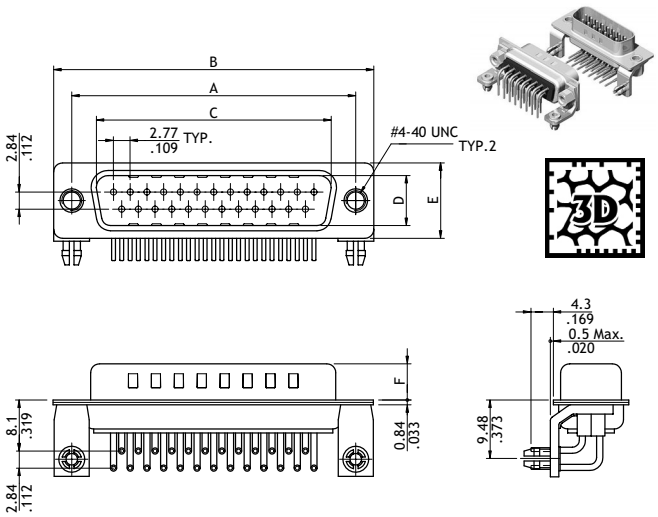

Receptacle Connector (I1/I3 Type)

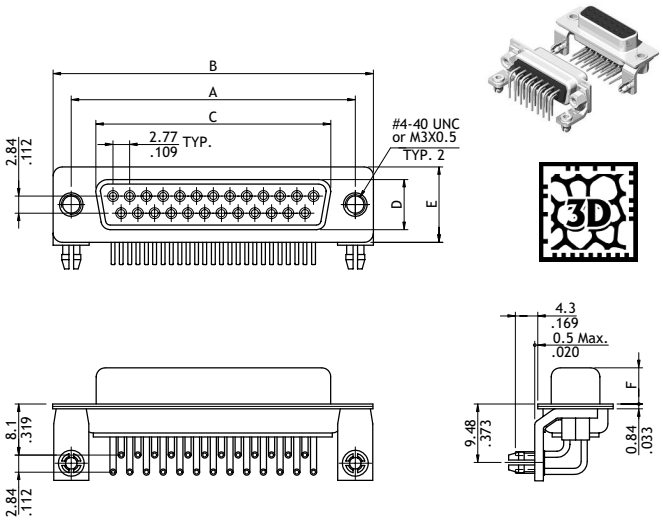

Circuits	Connector Type	Dimension				
		A	B	C	E	F
9	Plug	25.0(.984)	30.8(1.213)	16.92(.666)	12.5(.492)	6.0(.236)
	Receptacle	25.0(.984)	30.8(1.213)	16.3(.642)	12.5(.492)	5.8(.228)
15	Plug	33.32(1.312)	39.2(1.543)	25.25(.994)	12.5(.492)	6.0(.236)
	Receptacle	33.32(1.312)	39.2(1.543)	24.6(.969)	12.5(.492)	5.8(.228)
25	Plug	47.04(1.852)	53.1(2.091)	38.96(1.534)	12.5(.492)	6.0(.236)
	Receptacle	47.04(1.852)	53.1(2.091)	38.3.508)	12.5(.492)	5.8(.228)
37	Plug	63.5(2.500)	69.4(2.732)	55.42(2.182)	12.5(.492)	6.0(.236)
	Receptacle	63.5(2.500)	69.4(2.732)	54.8(2.157)	12.5(.492)	5.8(.228)

Ordering Code

❶	❷	❸	❹	❺	❻
CD73	25	P	2	1	00

❶ Series No.
❷ No. of Circuits: 09, 15, 25, 37
❸ Connector Type: P = Plug
S = Receptacle
❹ Plating Option: 2 = Gold flash over Nickel
*Optional plating available but MOQ requested
❺ Insulator Color: 1 = Black

❻ Other Options:
00 = With ϕ3.0mm holes on shell (Standard)
I0 = Riveted ground tabs #4-40 UNC Open and ground tabs with ϕ3.2mm holes
I2 = Riveted ground tabs thread M3x0.5 Open and ground tabs with ϕ3.2mm holes
I1 = Riveted ground tabs #4-40 UNC Open and ground tabs with board lock
I3 = Riveted ground tabs thread M3x0.5 Open and ground tabs with board lock
*Special options consult manufacturer

Combo D-Sub Technical Specifications

◎ The connectors conform to MIL-C-24308(DIN 41652) and the shell dimensions are the same as standard D-sub connectors so that mating is no problem.
◎ Test methods for electronic connector are according to MILITARY standard MIL-STD-1344A and MIL-STD-202F

Construction

Connector Assemblies -
- Shell : Steel, Tin Plated as Standard
- Insulator : Glass filled polyester UL 94V-0 Color Black or Green
- Signal Contact when applicable : Copper alloy : Please see ordering code for plating options
- Standoff : Copper alloy, Tin over Copper
- Bracket : Steel, Nickel plated
- Rivnut : Copper alloy, Nickel plated
- Locking Clipper : Copper alloy, Tin over Copper

Coaxial Contact Assembly -
- Insulator : Teflon UL 94V-0, Color White
- Center and outside contact : Copper alloy Please see ordering code for plating options
- Lock link : Copper alloy, Tin plated over Nickel

High Power Contact Assembly -
- Contact : Copper alloy Please see ordering code for plating options
- Lock link : Copper alloy, Tin plated over Nickel

Performance Data

- Signal contact current rating : 3 Amps
- Signal contact resistance : < 10 mΩ
- Dielectric withstanding Voltage: 1000VAC for one minute at sea level
- Insulation Resistance : > 5000 MΩ
- Coaxial Contact impedance : 75Ω or 50Ω
- High power contact current rating : 40 or 20 Amps
- High power contact Resistance : < 2.7 m
- Connector mating and unmating force:17.0 kgf max.
- Durability:100 Cycles
- Operating Temperature: -55°- +125°C

Contact Arrangements

◎ Accommodate removable Coaxial and high power contacts
◎ The product indicated "◆" Not available at present

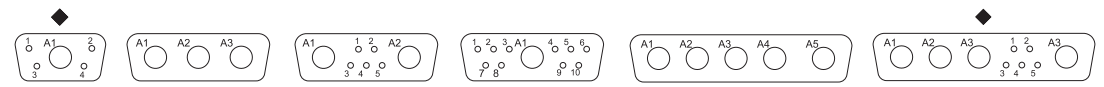

Contact Arrangement	5W1	3W3	7W2	11W1	5W5	9W4
Shell Size	E	A	A	A	B	B
No. of Signal Contacts	4	0	5	10	0	5
No. of Coaxial Contacts	1	3	2	1	5	4

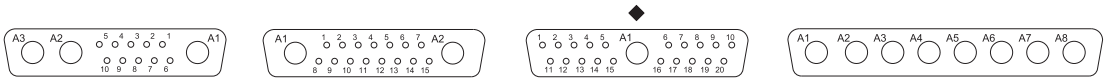

Contact Arrangement	13W3	17W2	21W1	8W8
Shell Size	B	B	B	C
No. of Signal Contacts	10	15	20	0
No. of Coaxial Contacts	3	2	1	8

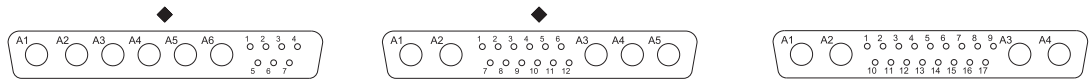

Contact Arrangement	13W6	17W5	21W4
Shell Size	C	C	C
No. of Signal Contacts	7	12	17
No. of Coaxial Contacts	6	5	4

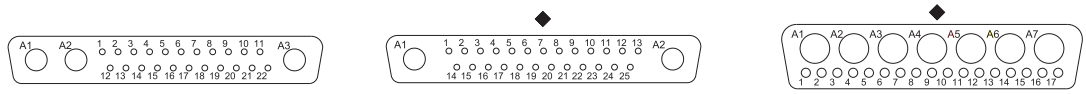

Contact Arrangement	25W3	27W2	24W7
Shell Size	C	C	D
No. of Signal Contacts	22	25	17
No. of Coaxial Contacts	3	2	7

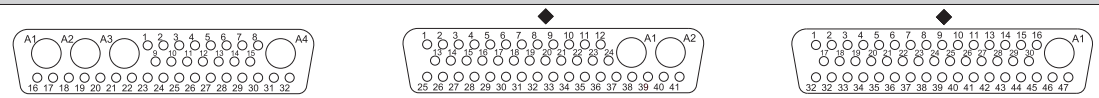

Contact Arrangement	36W4	43W2	47W1
Shell Size	D	D	D
No. of Signal Contacts	32	41	46
No. of Coaxial Contacts	4	2	1

Mounting Style Options

0 Riveted front and rear shell with 3.05mm Hole

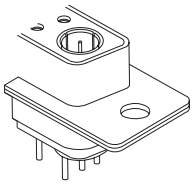

A Riveted #4-40 UNC close nuts on front shell DIM L=.5 8mm (Standard)

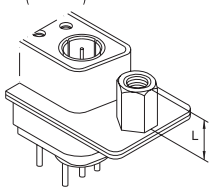

B Riveted #4-40 UNC open nuts on front shell DIM L=.4 0mm (Standard)

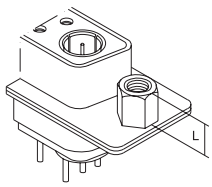

C Riveted #4-40 UNC open nuts on rear shell DIM. L= 4.0mm (Standard)

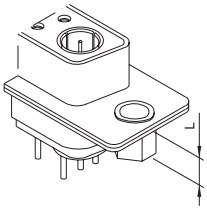

D Riveted #4-40 UNC close ground Stand-off on rear shell DIM L =7 0mm (Standard)

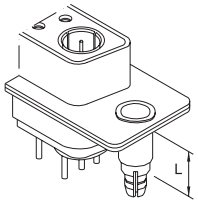

I Riveted ground tabs with #4-40 UNC open

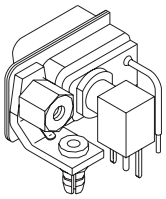

Coaxial Contact for Combination D-Sub

Contact Type	Shape	Part No.	Plating	Impedance	R.G Cable
Solder Cup	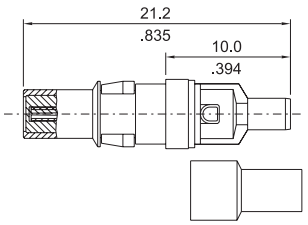 Plug Contact	CXLTPS27500	Gold flash plated over 50µin Nickel	75Ω	179B/U
		CXLTPS37500	15µin Gold plated over 50µin Nickel		
		CXLTPS47500	30µin Gold plated over 50µin Nickel		
		CXLTPS57500	50µin Gold plated over 50µin Nickel		
		CXLTPS25000	Gold flash plated over 50µin Nickel	50Ω	178B/U
		CXLTPS35000	15µin Gold plated over 50µin Nickel		
		CXLTPS45000	30µin Gold plated over 50µin Nickel		
		CXLTPS55000	50µin Gold plated over 50µin Nickel		
	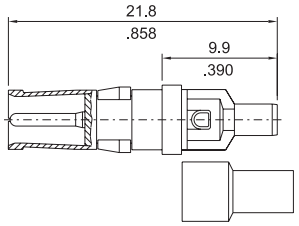 Receptacle Contact	CXLTSS27500	Gold flash plated over 50µin Nickel	75Ω	179B/U
		CXLTSS37500	15µin Gold plated over 50µin Nickel		
		CXLTSS47500	30µin Gold plated over 50µin Nickel		
		CXLTSS57500	50µin Gold plated over 50µin Nickel		
		CXLTSS25000	Gold flash plated over 50µin Nickel	50Ω	178B/U
		CXLTSS35000	15µin Gold plated over 50µin Nickel		
		CXLTSS45000	30µin Gold plated over 50µin Nickel		
		CXLTSS55000	50µin Gold plated over 50µin Nickel		
Straight DIP	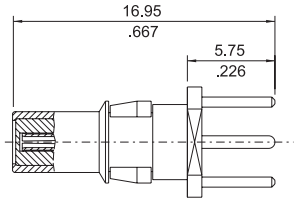 Plug Contact	CXLTPV27500	Gold flash plated over 50µin Nickel	75Ω	——
		CXLTPV37500	15µin Gold plated over 50µin Nickel		
		CXLTPV47500	30µin Gold plated over 50µin Nickel		
		CXLTPV57500	50µin Gold plated over 50µin Nickel		
		CXLTPV25000	Gold flash plated over 50µin Nickel	50Ω	——
		CXLTPV35000	15µin Gold plated over 50µin Nickel		
		CXLTPV45000	30µin Gold plated over 50µin Nickel		
		CXLTPV55000	50µin Gold plated over 50µin Nickel		
	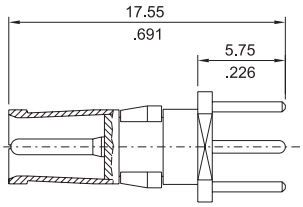 Receptacle Contact	CXLTSV27500	Gold flash plated over 50µin Nickel	75Ω	——
		CXLTSV37500	15µin Gold plated over 50µin Nickel		
		CXLTSV47500	30µin Gold plated over 50µin Nickel		
		CXLTSV57500	50µin Gold plated over 50µin Nickel		
		CXLTSV25000	Gold flash plated over 50µin Nickel	50Ω	——
		CXLTSV35000	15µin Gold plated over 50µin Nickel		
		CXLTSV45000	30µin Gold plated over 50µin Nickel		
		CXLTSV55000	50µin Gold plated over 50µin Nickel		
Right Angle DIP	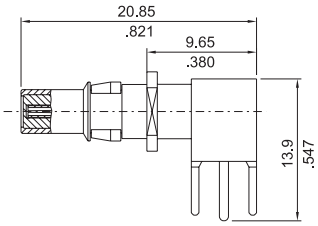 Plug Contact	CXLTPH27500	Gold flash plated over 50µin Nickel	75Ω	——
		CXLTPH37500	15µin Gold plated over 50µin Nickel		
		CXLTPH47500	30µin Gold plated over 50µin Nickel		
		CXLTPH57500	50µin Gold plated over 50µin Nickel		
		CXLTPH25000	Gold flash plated over 50µin Nickel	50Ω	——
		CXLTPH35000	15µin Gold plated over 50µin Nickel		
		CXLTPH45000	30µin Gold plated over 50µin Nickel		
		CXLTPH55000	50µin Gold plated over 50µin Nickel		
	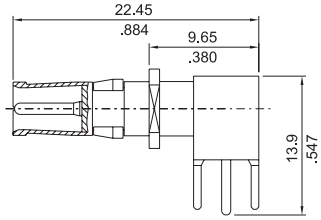 Receptacle Contact	CXLTSH27500	Gold flash plated over 50µin Nickel	75Ω	——
		CXLTSH37500	15µin Gold plated over 50µin Nickel		
		CXLTSH47500	30µin Gold plated over 50µin Nickel		
		CXLTSH57500	50µin Gold plated over 50µin Nickel		
		CXLTSH25000	Gold flash plated over 50µin Nickel	50Ω	——
		CXLTSH35000	15µin Gold plated over 50µin Nickel		
		CXLTSH45000	30µin Gold plated over 50µin Nickel		
		CXLTSH55000	50µin Gold plated over 50µin Nickel		

High Power Contact for Combination D-Sub

Contact Type	Shape	Part No.	Plating	Current Rating	Wire Size
Solder Cup	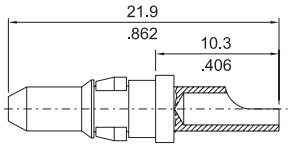 Plug Contact	CHPTPS22000	Gold flash plated over 50μin Nickel	20A	AWG #12~#14
		CHPTPS32000	15μin Gold plated over 50μin Nickel		
		CHPTPS42000	30μin Gold plated over 50μin Nickel		
		CHPTPS52000	50μin Gold plated over 50μin Nickel		
		CHPTPS24000	Gold flash plated over 50μin Nickel	40A	AWG #8~#10
		CHPTPS34000	15μin Gold plated over 50μin Nickel		
		CHPTPS44000	30μin Gold plated over 50μin Nickel		
		CHPTPS54000	50μin Gold plated over 50μin Nickel		
	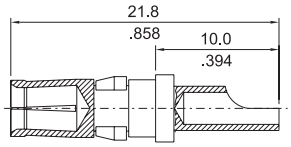 Receptacle Contact	CHPTSS22000	Gold flash plated over 50μin Nickel	20A	AWG #12~#14
		CHPTSS32000	15μin Gold plated over 50μin Nickel		
		CHPTSS42000	30μin Gold plated over 50μin Nickel		
		CHPTSS52000	50μin Gold plated over 50μin Nickel		
		CHPTSS24000	Gold flash plated over 50μin Nickel	40A	AWG #8~#10
		CHPTSS34000	15μin Gold plated over 50μin Nickel		
		CHPTSS44000	30μin Gold plated over 50μin Nickel		
		CHPTSS54000	50μin Gold plated over 50μin Nickel		
Crimp Type	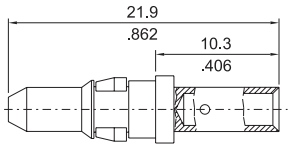 Plug Contact	CHPTPC22000	Gold flash plated over 50μin Nickel	20A	AWG #12~#14
		CHPTPC32000	15μin Gold plated over 50μin Nickel		
		CHPTPC42000	30μin Gold plated over 50μin Nickel		
		CHPTPC52000	50μin Gold plated over 50μin Nickel		
		CHPTPC24000	Gold flash plated over 50μin Nickel	40A	AWG #8~#10
		CHPTPC34000	15μin Gold plated over 50μin Nickel		
		CHPTPC44000	30μin Gold plated over 50μin Nickel		
		CHPTPC54000	50μin Gold plated over 50μin Nickel		
	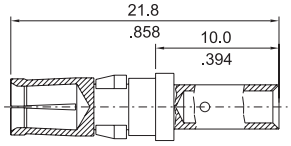 Receptacle Contact	CHPTSC22000	Gold flash plated over 50μin Nickel	20A	AWG #12~#14
		CHPTSC32000	15μin Gold plated over 50μin Nickel		
		CHPTSC42000	30μin Gold plated over 50μin Nickel		
		CHPTSC52000	50μin Gold plated over 50μin Nickel		
		CHPTSC24000	Gold flash plated over 50μin Nickel	40A	AWG #8~#10
		CHPTSC34000	15μin Gold plated over 50μin Nickel		
		CHPTSC44000	30μin Gold plated over 50μin Nickel		
		CHPTSC54000	50μin Gold plated over 50μin Nickel		

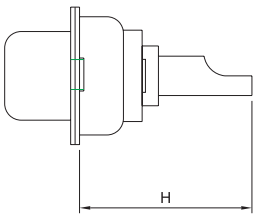

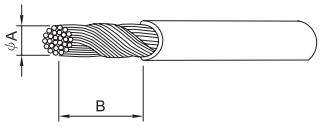

Current Rating	Crimp and Solder Terminations			
	DIM. ϕA min.	DIM.ϕA max.	DIM. B	DIM. H max.
20A	1.8(.071)	2.6(.102)	8.0(.315)~ 8.8(.346)	16.5(.650)
40A	2.9(.114)	4.5(.177)		

High Power Contact for Combination D-Sub

Contact Type	Shape	Part No.	Plating	Current Rating
Straight DIP	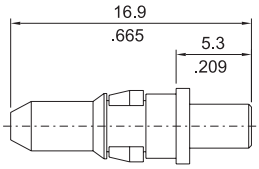 Plug Contact	CHPTPV22000	Gold flash plated over 50μin Nickel	20A
		CHPTPV32000	15μin Gold plated over 50μin Nickel	
		CHPTPV42000	30μin Gold plated over 50μin Nickel	
		CHPTPV52000	50μin Gold plated over 50μin Nickel	
		CHPTPV24000	Gold flash plated over 50μin Nickel	40A
		CHPTPV34000	15μin Gold plated over 50μin Nickel	
		CHPTPV44000	30μin Gold plated over 50μin Nickel	
		CHPTPV54000	50μin Gold plated over 50μin Nickel	
	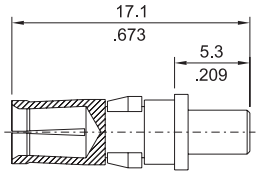 Receptacle Contact	CHPTSV22000	Gold flash plated over 50μin Nickel	20A
		CHPTSV32000	15μin Gold plated over 50μin Nickel	
		CHPTSV42000	30μin Gold plated over 50μin Nickel	
		CHPTSV52000	50μin Gold plated over 50μin Nickel	
		CHPTSV24000	Gold flash plated over 50μin Nickel	40A
		CHPTSV34000	15μin Gold plated over 50μin Nickel	
		CHPTSV44000	30μin Gold plated over 50μin Nickel	
		CHPTSV54000	50μin Gold plated over 50μin Nickel	
Right Angle DIP	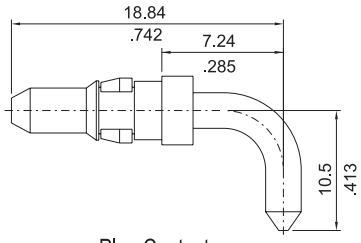 Plug Contact	CHPTPH22000	Gold flash plated over 50μin Nickel	20A
		CHPTPH32000	15μin Gold plated over 50μin Nickel	
		CHPTPH42000	30μin Gold plated over 50μin Nickel	
		CHPTPH52000	50μin Gold plated over 50μin Nickel	
		CHPTPH24000	Gold flash plated over 50μin Nickel	40A
		CHPTPH34000	15μin Gold plated over 50μin Nickel	
		CHPTPH44000	30μin Gold plated over 50μin Nickel	
		CHPTPH54000	50μin Gold plated over 50μin Nickel	
	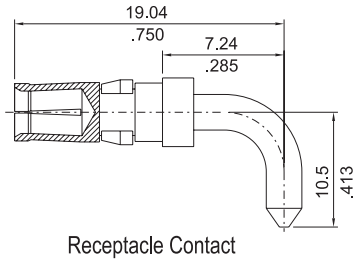 Receptacle Contact	CHPTSH22000	Gold flash plated over 50μin Nickel	20A
		CHPTSH32000	15μin Gold plated over 50μin Nickel	
		CHPTSH42000	30μin Gold plated over 50μin Nickel	
		CHPTSH52000	50μin Gold plated over 50μin Nickel	
		CHPTSH24000	Gold flash plated over 50μin Nickel	40A
		CHPTSH34000	15μin Gold plated over 50μin Nickel	
		CHPTSH44000	30μin Gold plated over 50μin Nickel	
		CHPTSH54000	50μin Gold plated over 50μin Nickel	

P/N	CD-RWT-0100

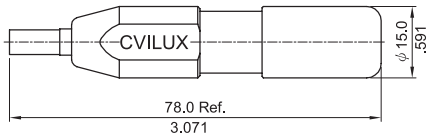

The COMBO D-SUB EXTRACTOR.
It is used in Coaxial or High power contact.
(available for male/female)

Step 1

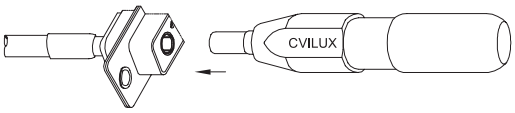

Step 2

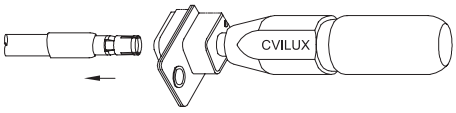

Step 3

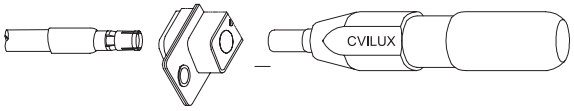

Combination D-Sub Housing

◎ Pre-loaded stamped signal contact
◎ Can be mated with coaxial or high power contact
◎ High power contact available for crimp or solder type in 20A or 40A
◎ Metal shell with ground indents
◎ Riveted Hex nuts or hard ware accessories options available

RoHS Compliant

C3W3 (Plug Connector)

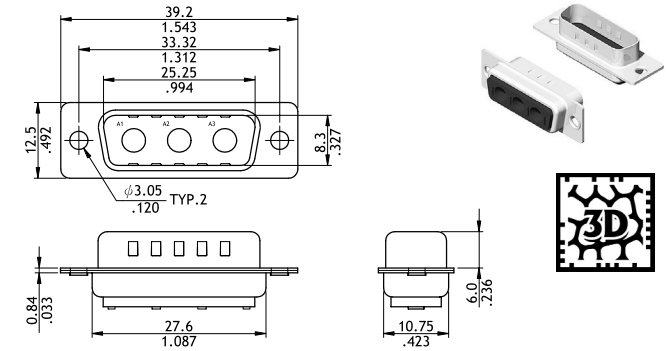

C3W3 (Receptacle Connector)

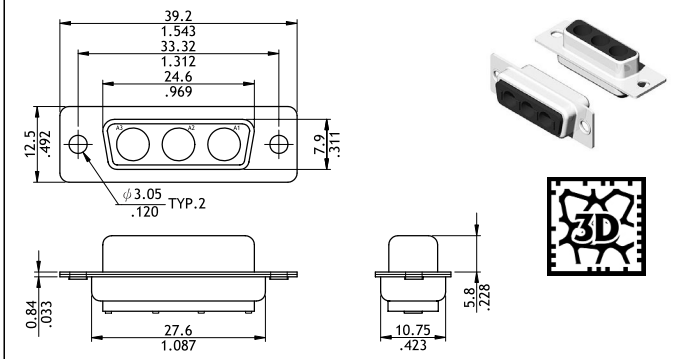

3W3C (Plug Connector)

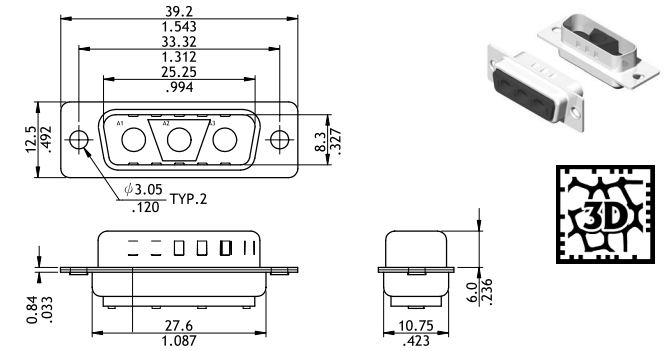

3W3C (Receptacle Connector)

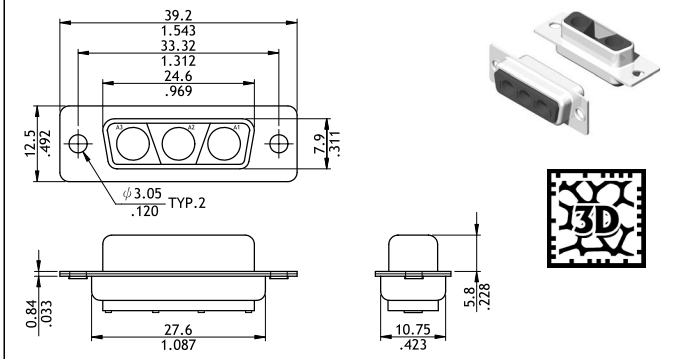

C7W2 (Plug Connector)

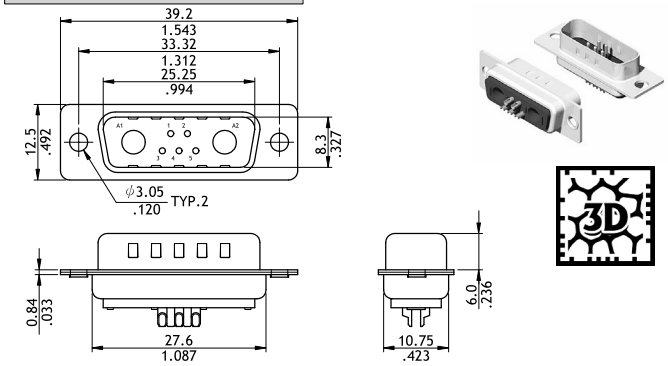

C7W2 (Receptacle Connector)

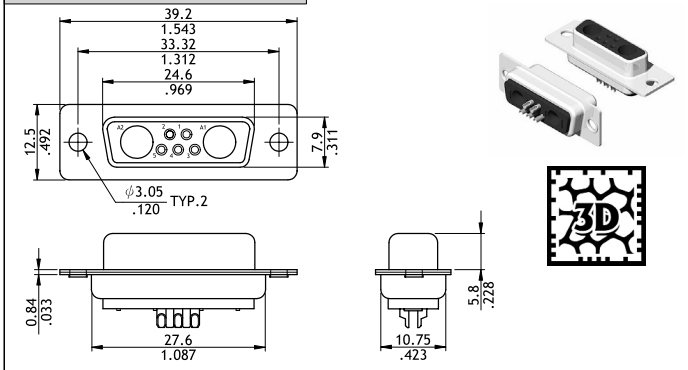

11W1 (Plug Connector)

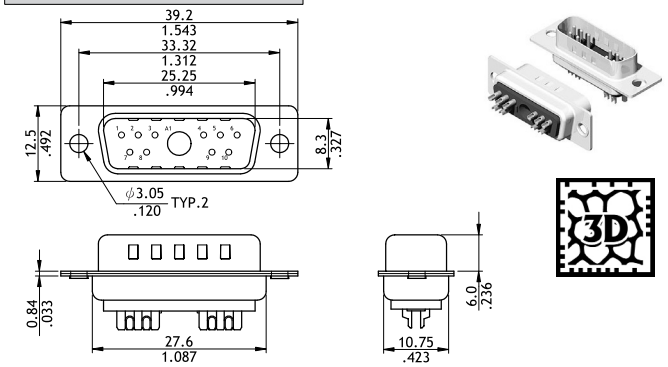

11W1 (Receptacle Connector)

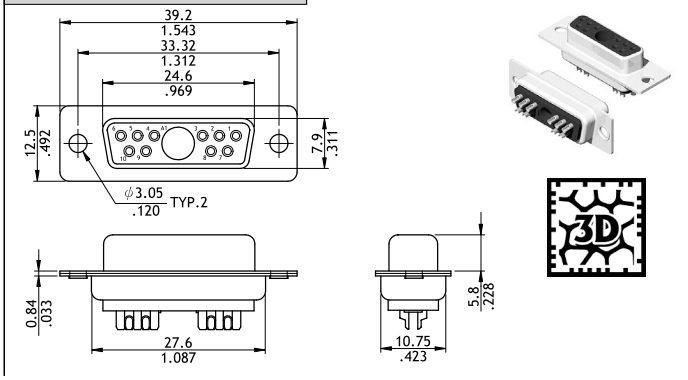

Combination D-Sub Housing

C5W5 (Plug Connector)

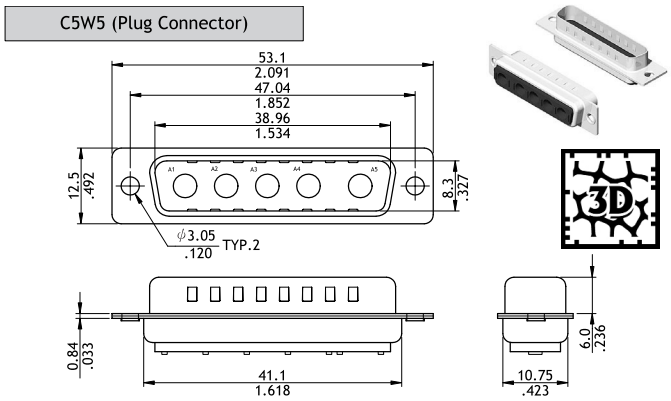

C5W5 (Receptacle Connector)

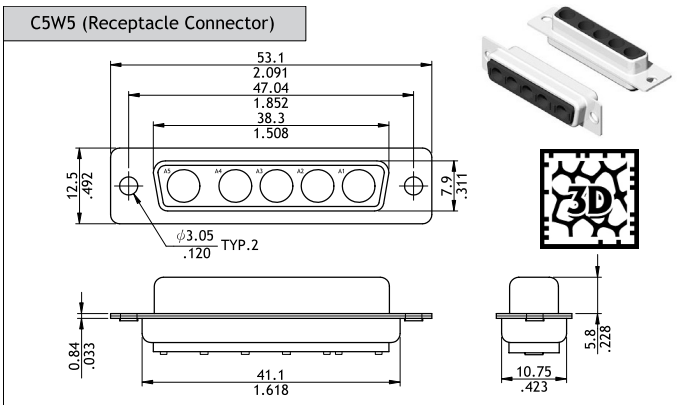

13W3 (Plug Connector)

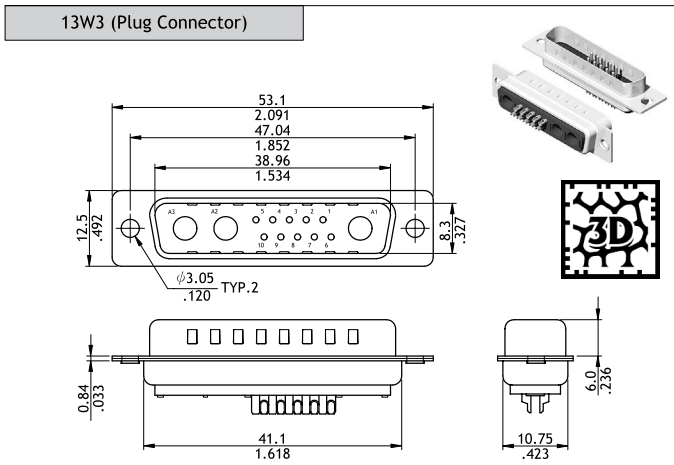

13W3 (Receptacle Connector)

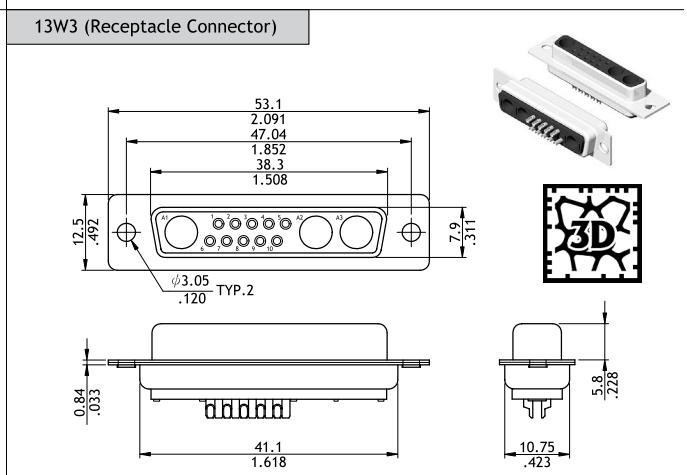

17W2 (Plug Connector)

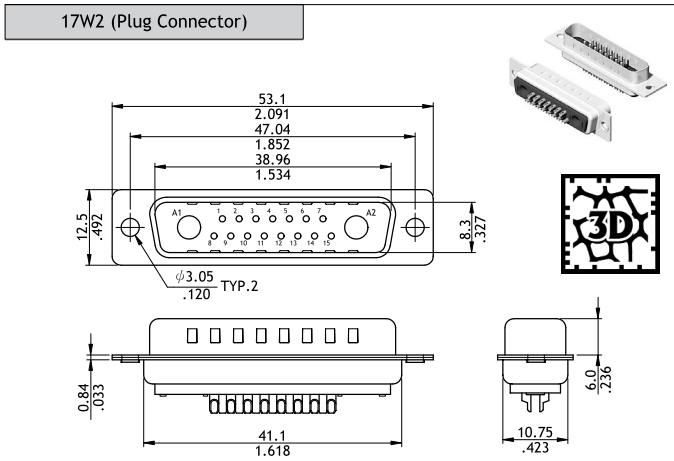

17W2 (Receptacle Connector)

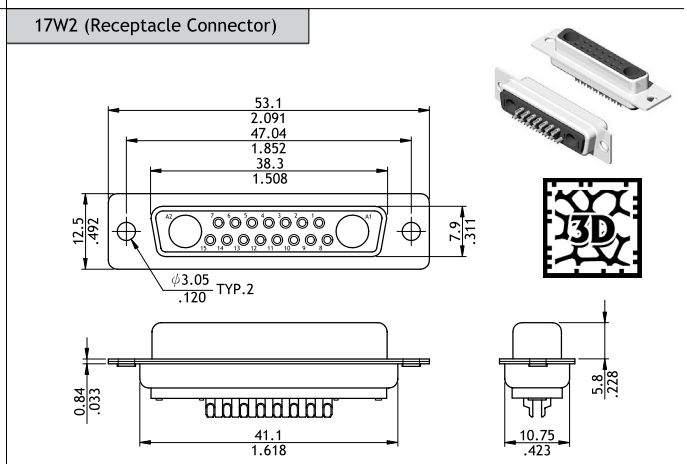

C8W8 (Plug Connector)

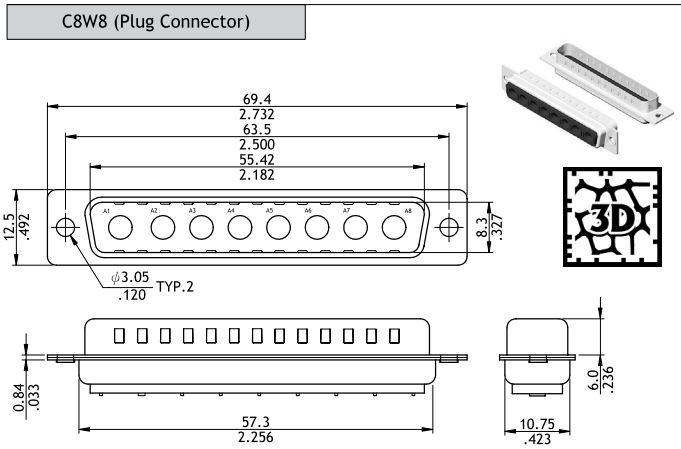

C8W8 (Receptacle Connector)

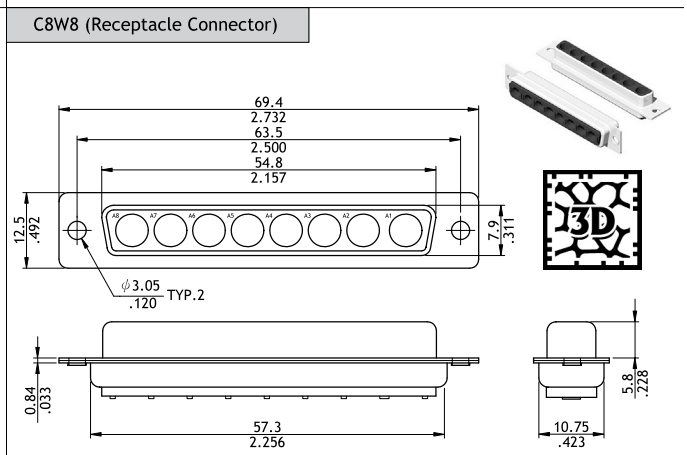

Combination D-Sub Housing

21W4 (Plug Connector)

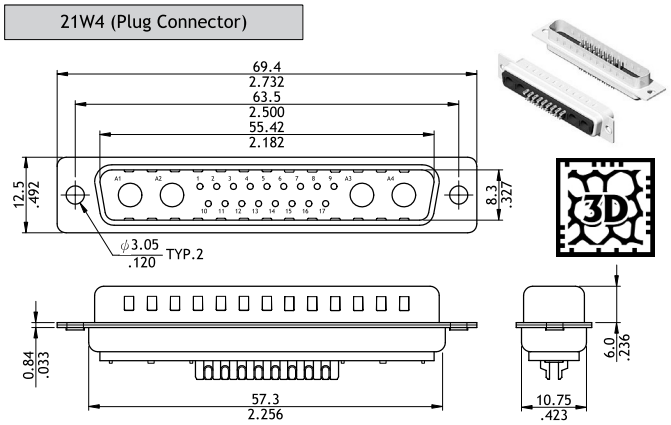

21W4 (Receptacle Connector)

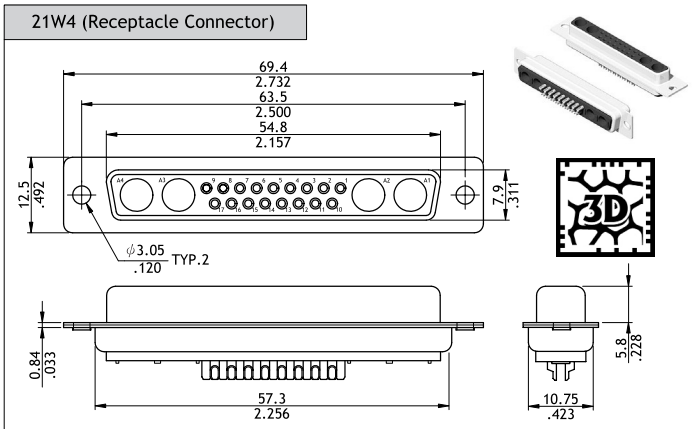

25W3 (Plug Connector)

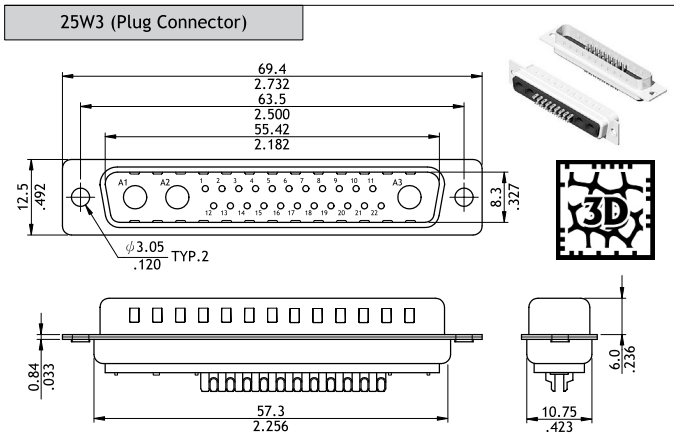

25W3 (Receptacle Connector)

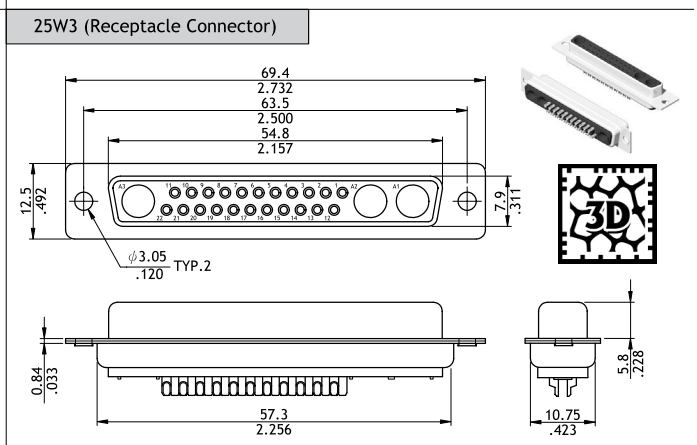

36W4 (Plug Connector)

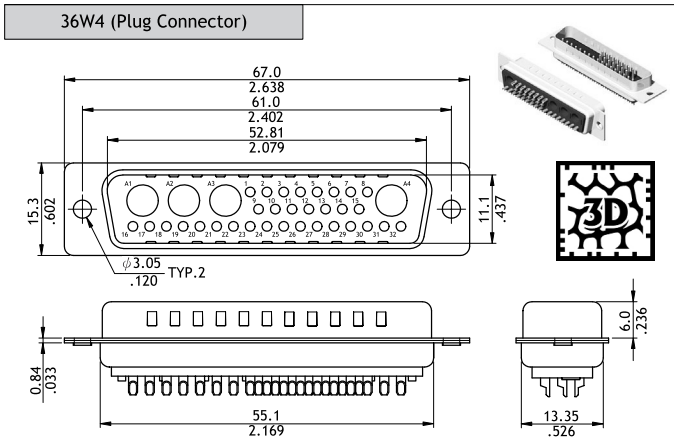

36W4 (Receptacle Connector)

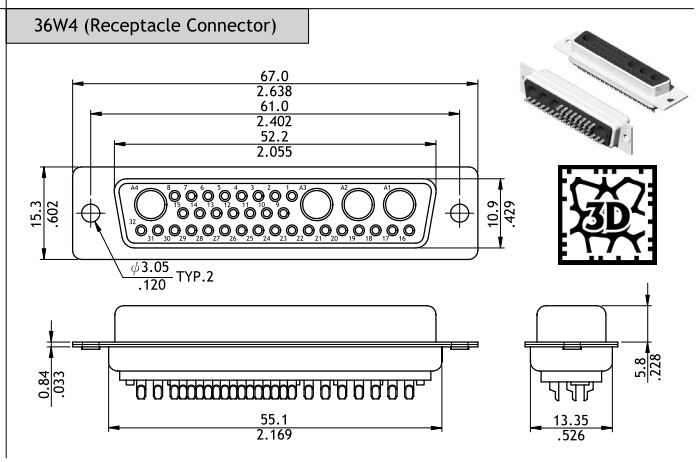

Ordering Code

❶	❷	❸	❹	❺	❻
I 3W 3	P 0	S 0	A	1 0 0	0 0 0

❶ Series No.: C3W3,3W3C,C7W2,11W1,C5W5,13W3
17W3,C8W8,21W4,25W3,36W4

❷ Connector Type: P0 = Plug
S0 = Receptacle

❸ Contact Tail: S0 = Solder Cup Type
(C3W3, C5W5, 3W3C, C8W8 Series, Code = 00)

❹ Signal Contact Plating:
A = Selective Gold flash over Nickel
0 = Without Signal Contact

❺ Insulator Color: 100 = Black

❻ Mounting Style:
000 = With ϕ3.0mm holes on shell (Standard)
A00 = Riveted #4-40 UNC Close nuts on Front shell
B00 = Riveted #4-40 UNC Open nuts on Front shell
C00 = Riveted #4-40 UNC Open nuts on Rear shell
*Special options consult manufacturer
*Connectors and coaxial/high power contacts should be ordered respectively to confirm production process

Coaxial Straight DIP Combination D-Sub

◎ Standard type with #4-40 UNC threaded ground stand-off
◎ Combined with stamped signal and machined coaxial contacts
◎ For top entry connection
◎ Metal shell with ground indents
◎ Riveted Hex nuts or hard ware accessories options available

RoHS Compliant

C3W3 (Plug Connector)

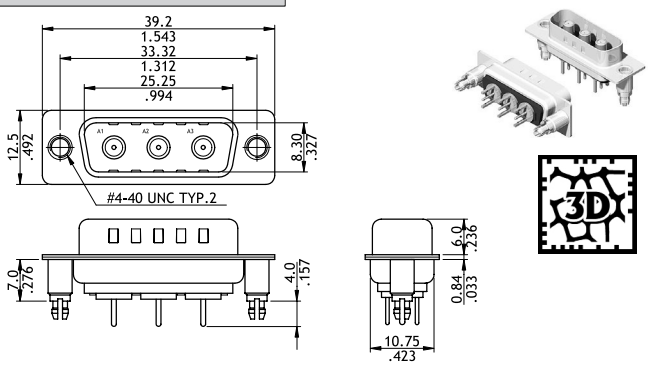

C3W3 (Receptacle Connector)

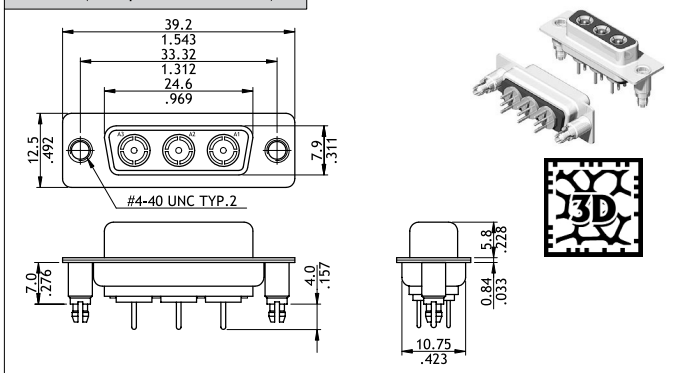

3W3C (Plug Connector)

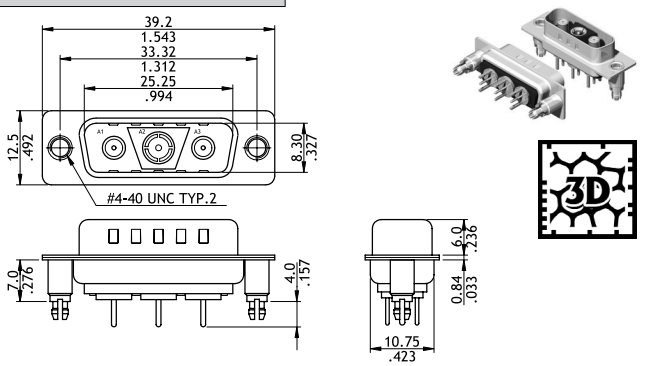

3W3C (Receptacle Connector)

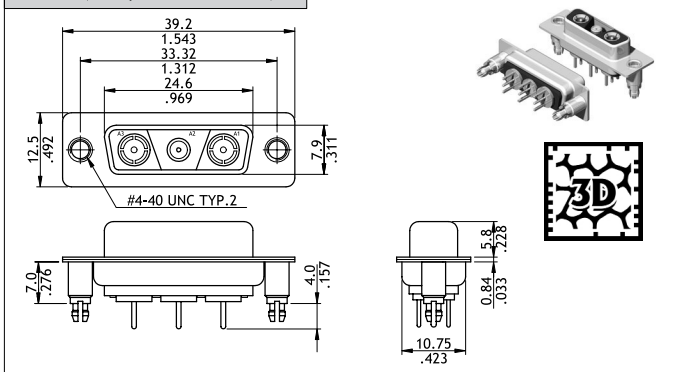

C7W2 (Plug Connector)

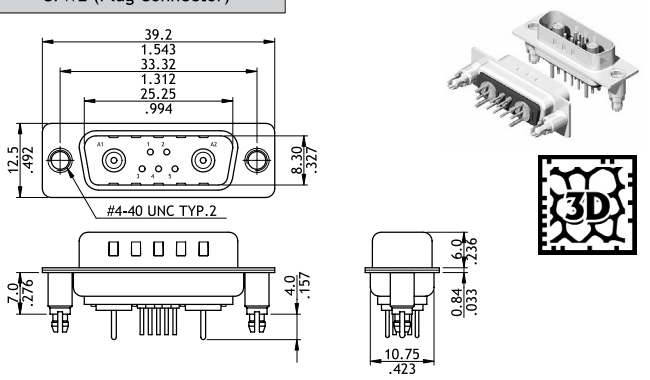

C7W2 (Receptacle Connector)

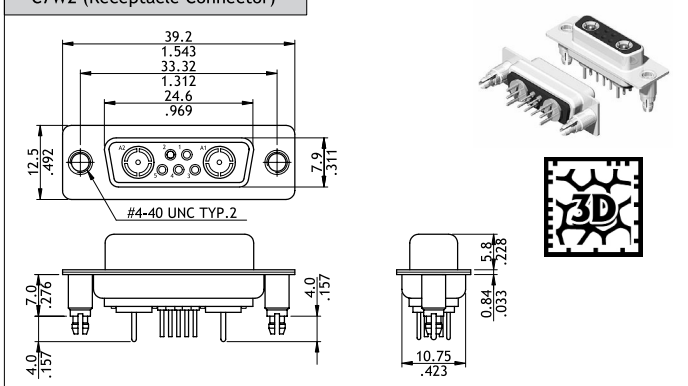

11W1 (Plug Connector)

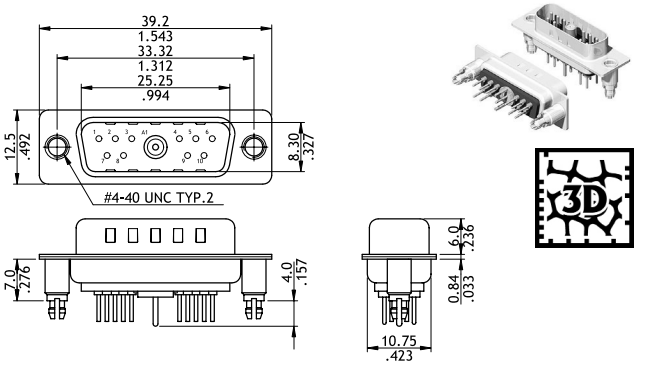

11W1 (Receptacle Connector)

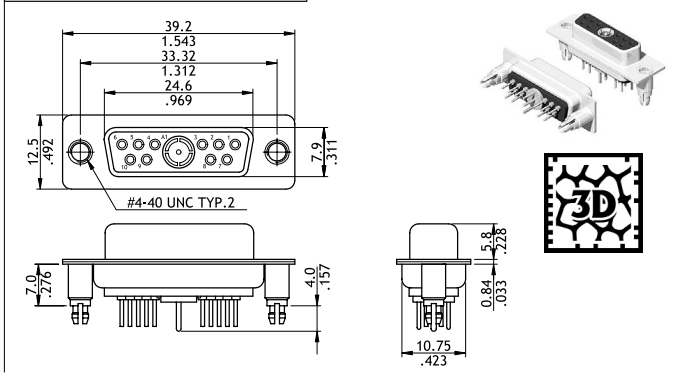

Coaxial Straight DIP Combination D-Sub

C5W5 (Plug Connector)

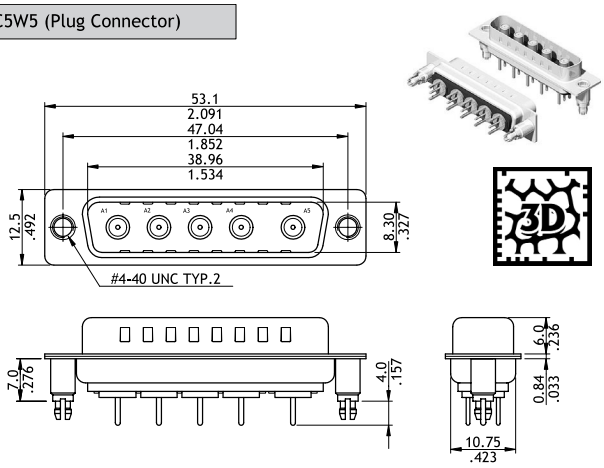

C5W5 (Receptacle Connector)

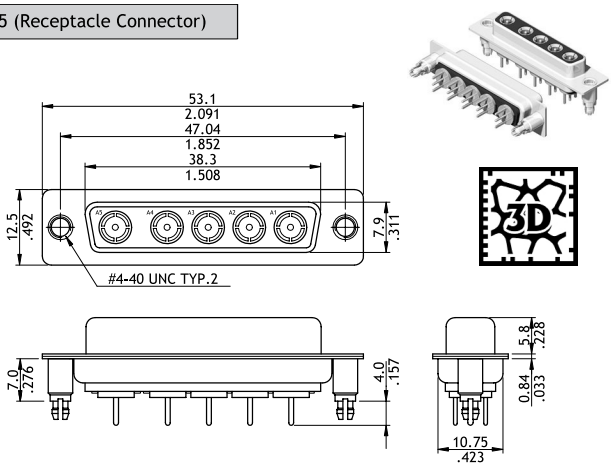

13W3 (Plug Connector)

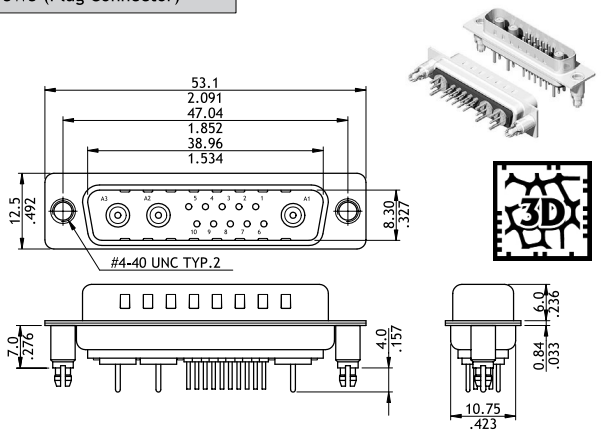

13W3 (Receptacle Connector)

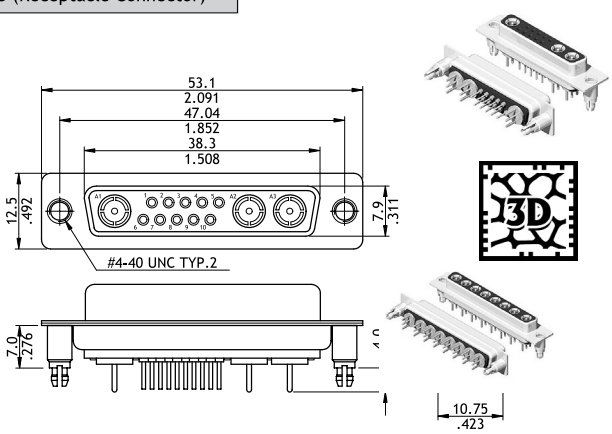

17W2 (Plug Connector)

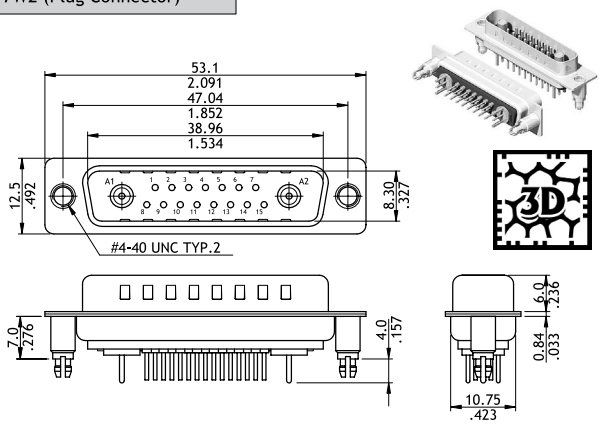

17W2 (Receptacle Connector)

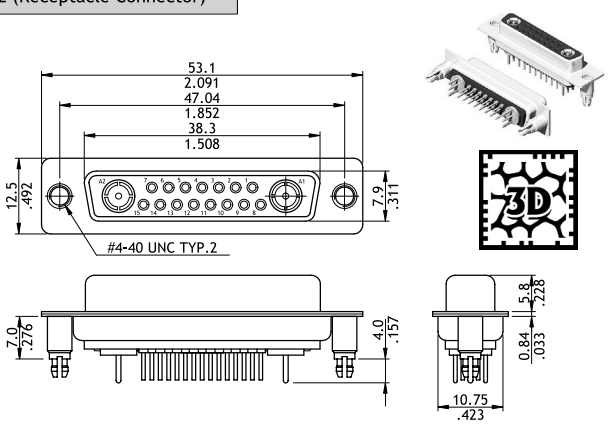

C8W8 (Plug Connector)

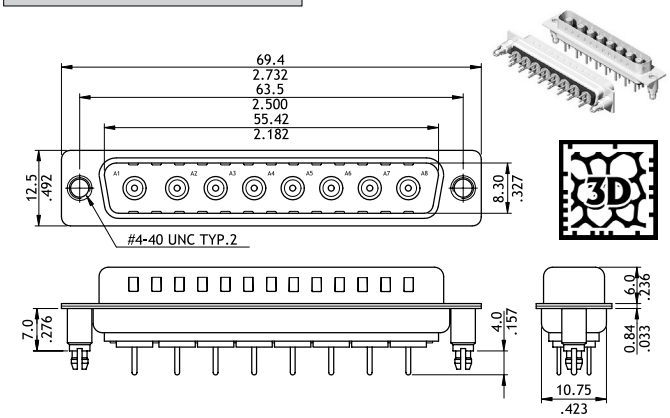

C8W8 (Receptacle Connector)

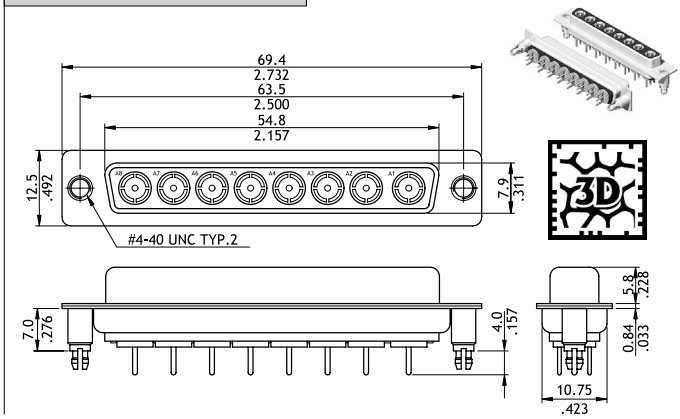

Coaxial Straight DIP Combination D-Sub

21W4 (Plug Connector)

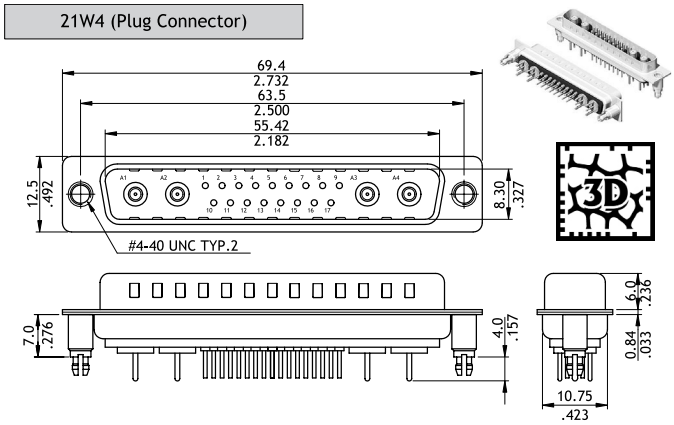

21W4 (Receptacle Connector)

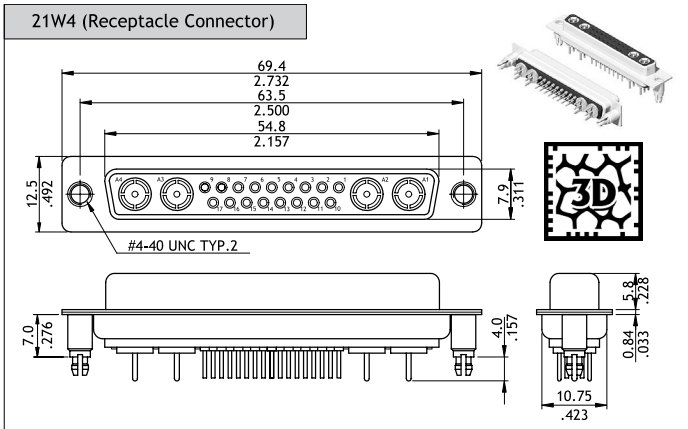

25W3 (Plug Connector)

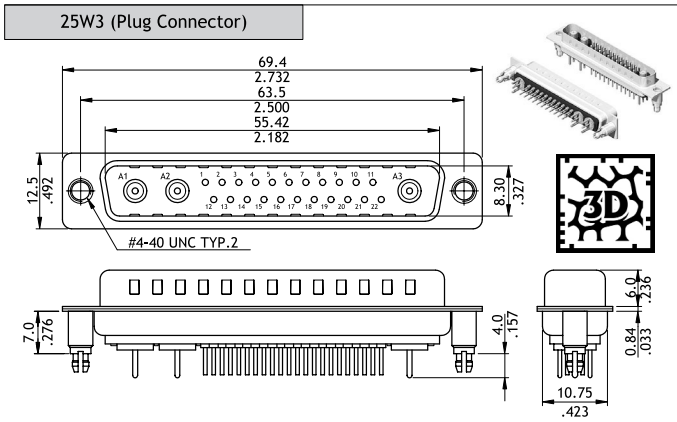

25W3 (Receptacle Connector)

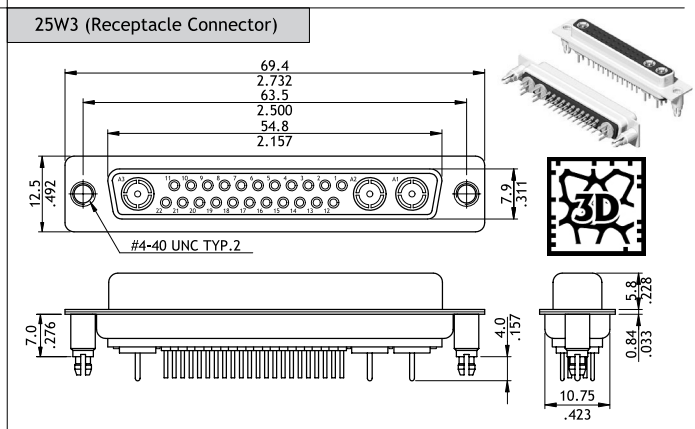

36W4 (Plug Connector)

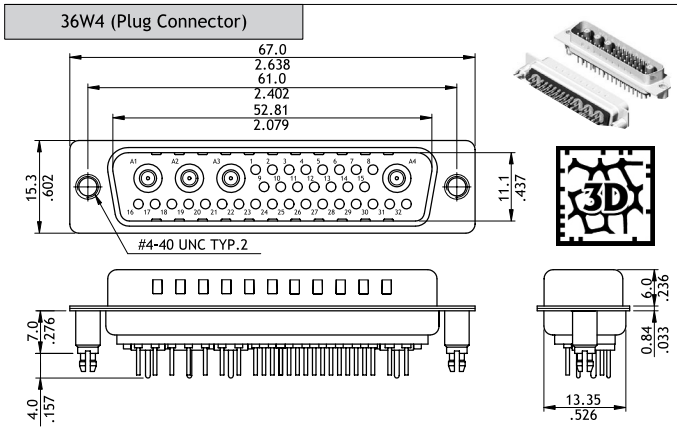

36W4 (Receptacle Connector)

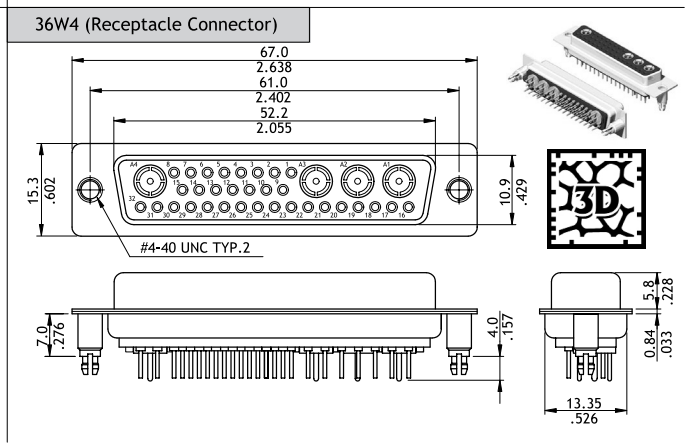

Ordering Code

❶	❷	❸	❹	❺	❻	❼	❽	❾
I 3 W 3	S	C	V	2	2	1	7 5	D 0 0

❶ Series No.: C3W3,3W3C,C7W2,11W1,C5W5,13W3
17W3,C8W8,21W4,25W3,36W4

❷ Connector Type: P = Plug
S = Receptacle

❸ Contact Type: C = Coaxial Contact

❹ Contact Tail Style: V = Straight DIP Type

❺ Coaxial Contact Plating: 2 = Gold flash over Nickel

❻ Signal Contact Plating: 2 = Gold flash over Nickel
0 = Without Signal Contact

❼ Insulator Color: 1 = Black

❽ Performance: 50 = 50Ω , 75 = 75Ω

❾ Mounting Style:
000 = With ϕ3.05mm holes on shell (Standard)
A00 = Riveted #4-40 UNC Close nuts on Front shell
B00 = Riveted #4-40 UNC Open nuts on Front shell
C00 = Riveted #4-40 UNC Open nuts on Rear shell
D00 = Riveted #4-40 UNC Gound Stand-off
*Special options consult manufacturer

Coaxial Right Angle DIP Combination D-Sub

◎ Standard type with #4-40 UNC threaded ground tabs and board locks to secure connector on board
◎ Combined with stamped signal and machined coaxial contacts
◎ For side entry connection
◎ Metal shell with ground indents
◎ Riveted Hex nuts or hardware accessories options available

RoHS Compliant

C3W3 (Plug Connector)

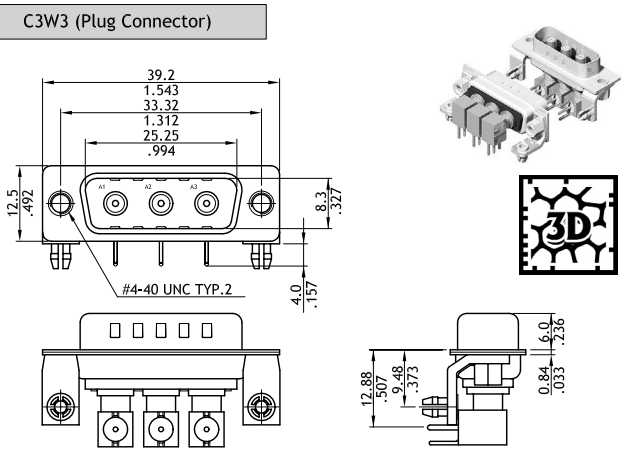

C3W3 (Receptacle Connector)

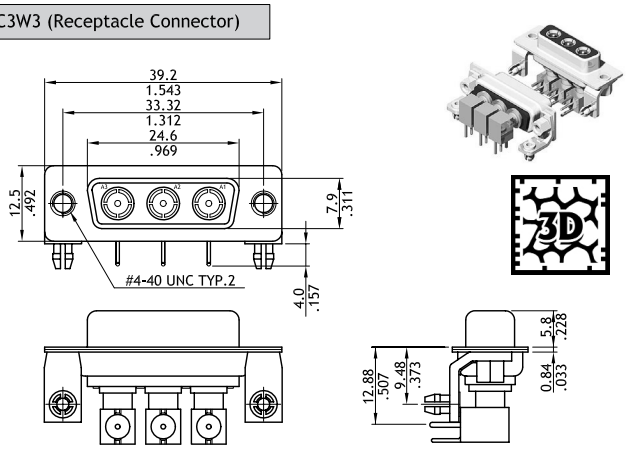

3W3C (Plug Connector)

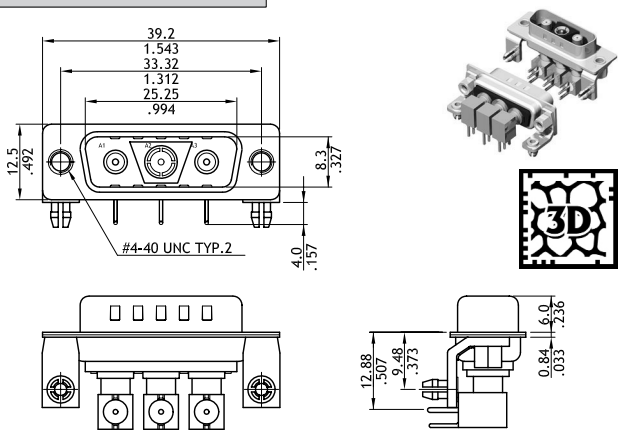

3W3C (Receptacle Connector)

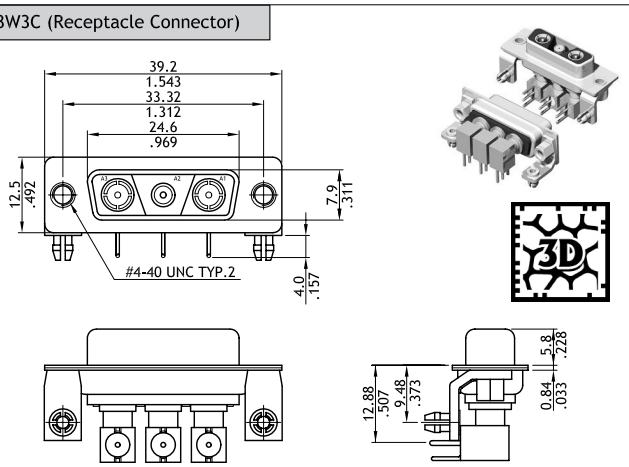

C7W2 (Plug Connector)

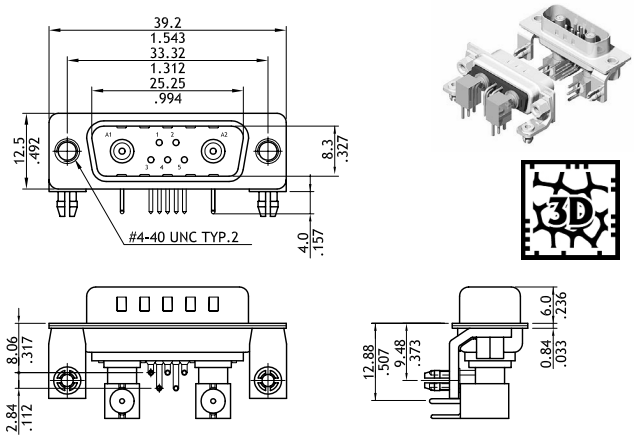

C7W2 (Receptacle Connector)

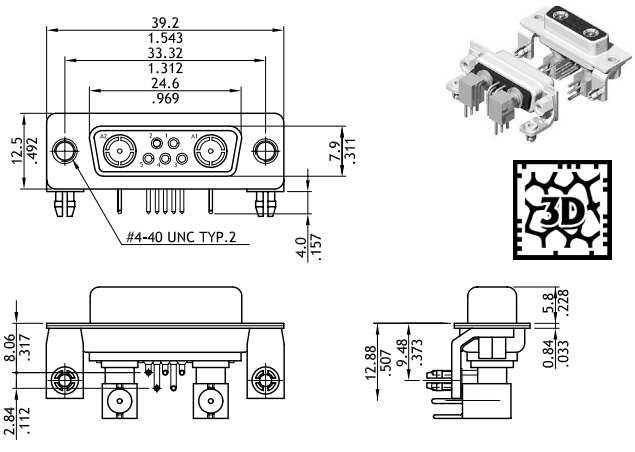

Coaxial Right Angle DIP Combination D-Sub

11W1 (Plug Connector)

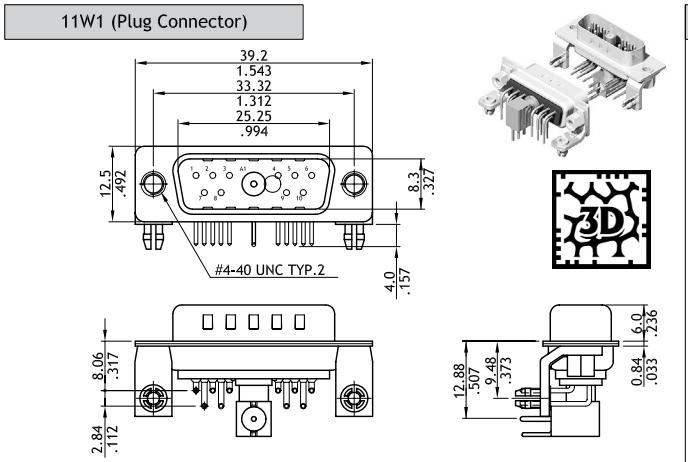

11W1 (Receptacle Connector)

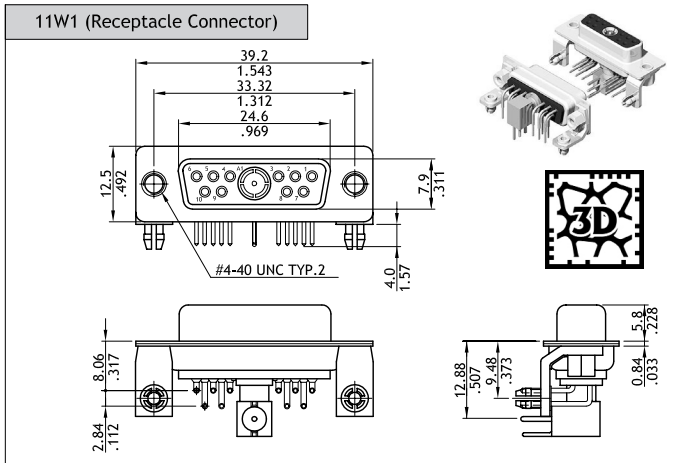

C5W5 (Plug Connector)

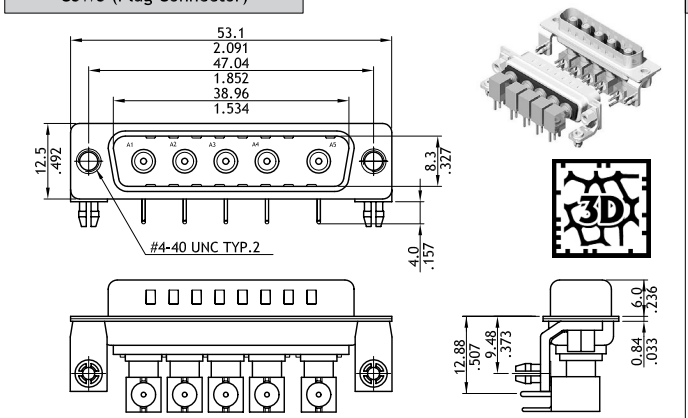

C5W5 (Receptacle Connector)

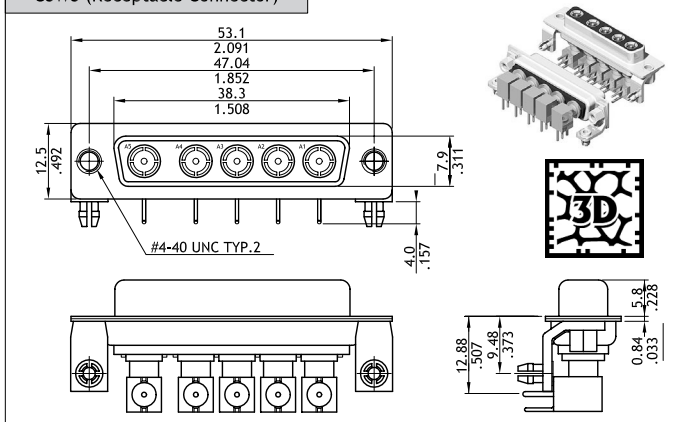

13W3 (Plug Connector)

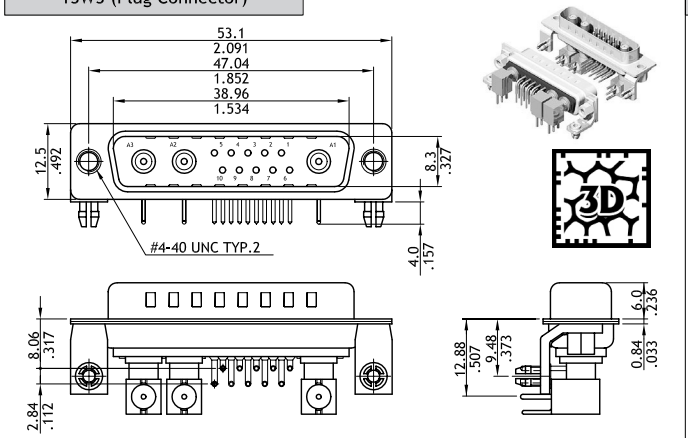

13W3 (Receptacle Connector)

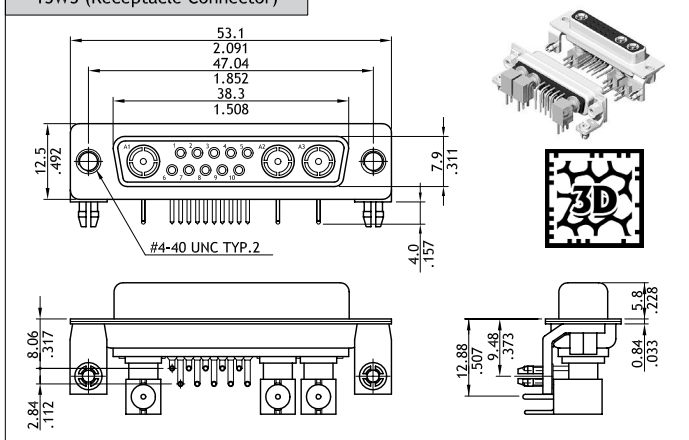

17W2 (Plug Connector)

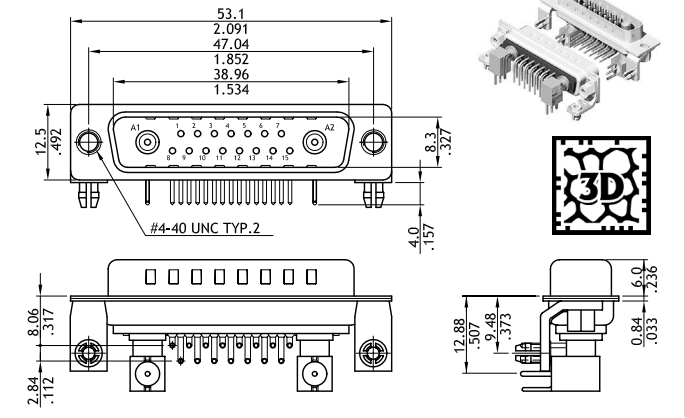

17W2 (Receptacle Connector)

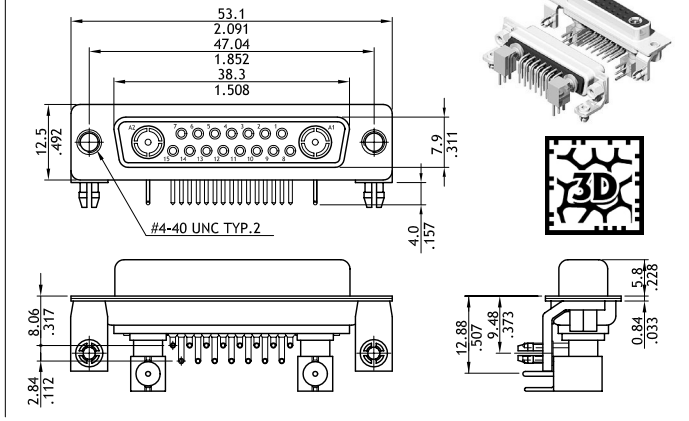

Coaxial Right Angle DIP Combination D-Sub

C8W8 (Plug Connector)

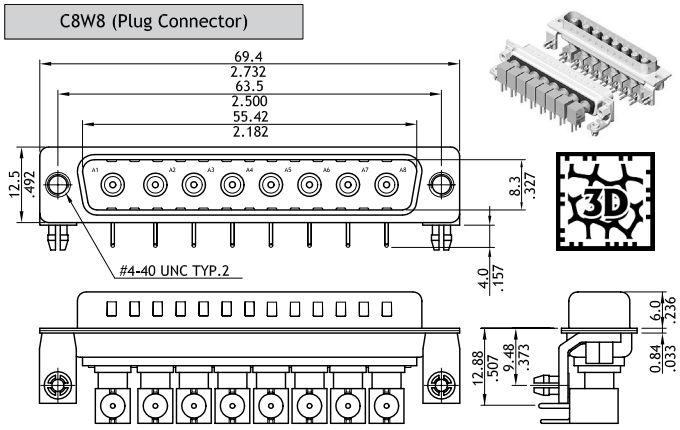

C8W8 (Receptacle Connector)

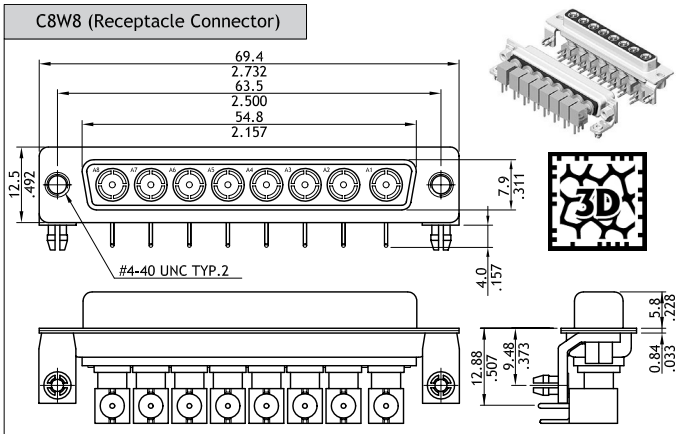

21W4 (Plug Connector)

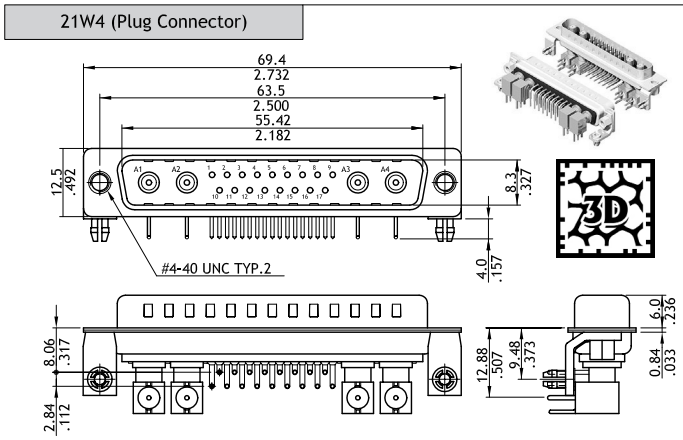

21W4 (Receptacle Connector)

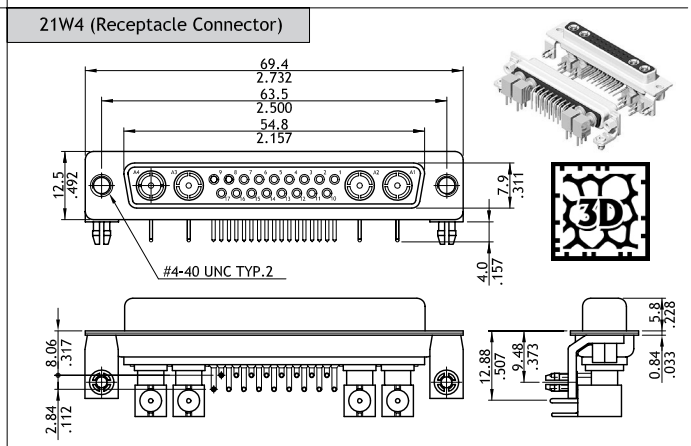

25W3 (Plug Connector)

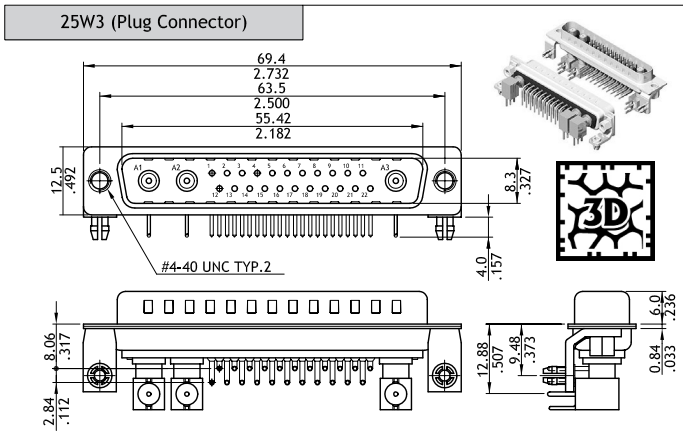

25W3 (Receptacle Connector)

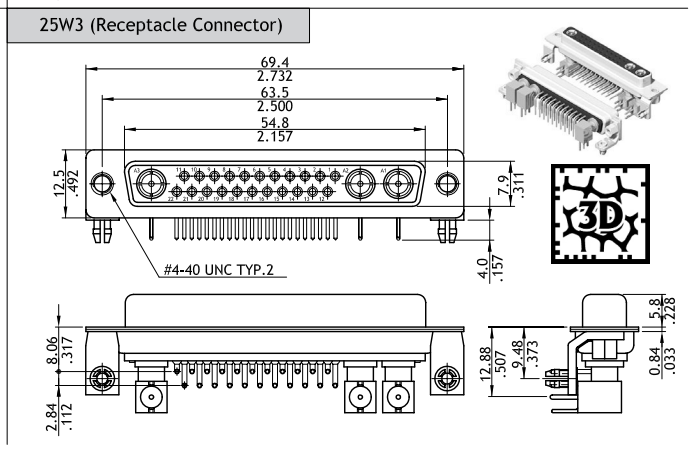

Ordering Code

❶	❷	❸	❹	❺	❻	❼	❽	❾
I 3 W 3	S	C	H	2	2	1	7 5	I 1 0

❶ Series No.: C3W3,3W3C,C7W2,11W1,C5W5,13W3
17W3,C8W8,21W4,25W3,36W4

❷ Connector Type: P = Plug
S = Receptacle

❸ Contact Type: C = Coaxial Contact

❹ Contact Tail Style: V = Straight DIP Type

❺ Coaxial Contact Plating: 2 = Gold flash over Nickel

❻ Signal Contact Plating: 2 = Gold flash over Nickel

❼ Insulator Color: 1 = Black

❽ Performance: 50 = 50Ω , 75 = 75Ω

❾ Mounting Style:
000 = With ϕ3.05mm holes on shell (Standard)
B00 = Riveted #4-40 UNC Close nuts on Front shell
C00 = Riveted #4-40 UNC Open nuts on Front shell
I00 = Riveted #4-40 UNC Ground tabs with ϕ3.2mm holes
I10 = Riveted #4-40 UNC Gound tabs with board locks (Standard)

*Special options consult manufacturer

20A High Power Straight DIP Solder Combination D-Sub

◎ Standard type with #4-40 UNC threaded ground stand-off
◎ Combined with stamped signal and machined 20A high power contacts
◎ For top entry connection
◎ Metal shell with ground indents
◎ Riveted Hex nuts or hardware accessories options available

RoHS Compliant

C3W3 (Plug Connector)

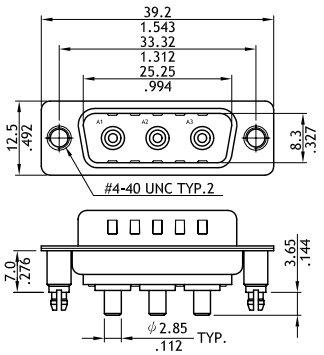

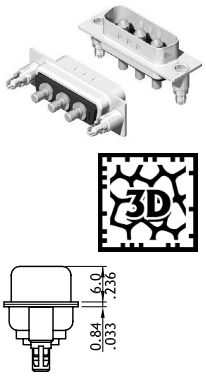

C3W3 (Receptacle Connector)

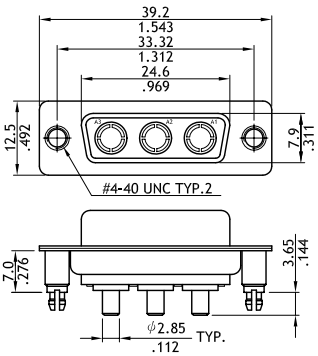

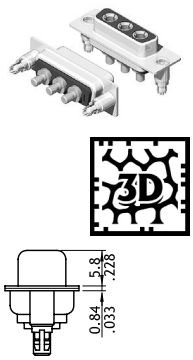

3W3C (Plug Connector)

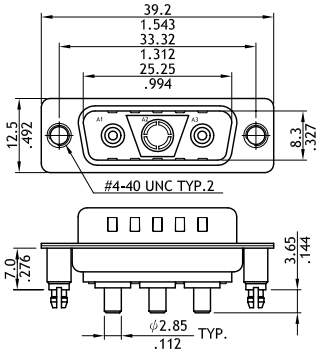

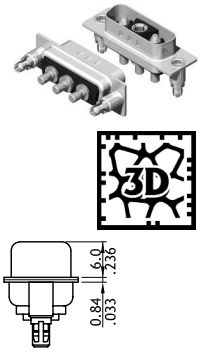

3W3C (Receptacle Connector)

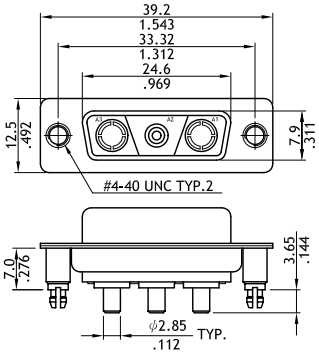

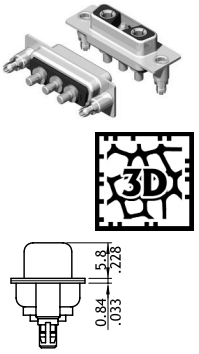

C7W2 (Plug Connector)

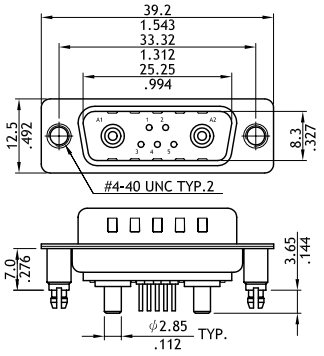

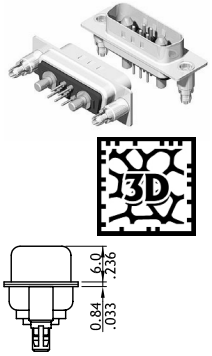

C7W2 (Receptacle Connector)

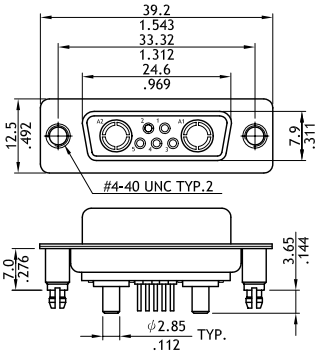

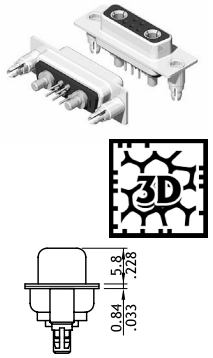

11W1 (Plug Connector)

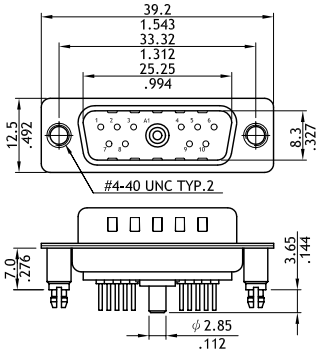

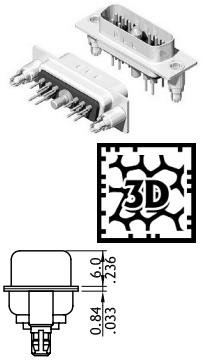

11W1 (Receptacle Connector)

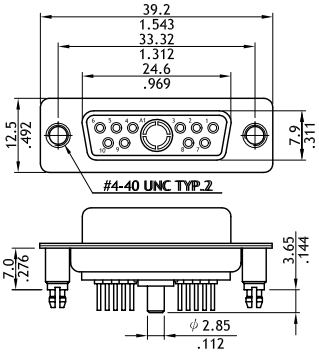

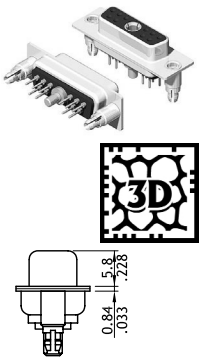

20A High Power Straight DIP Solder Combination D-Sub

C5W5 (Plug Connector)

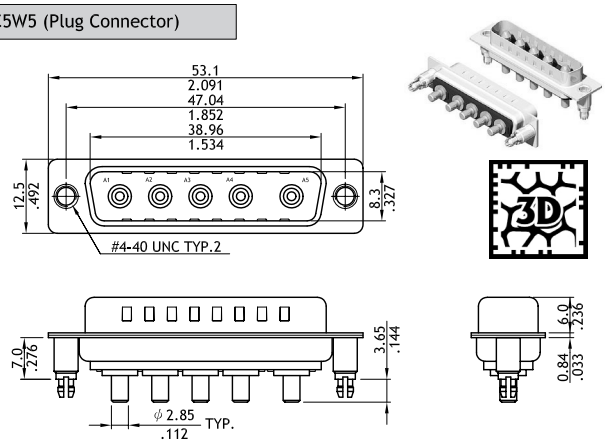

C5W5 (Receptacle Connector)

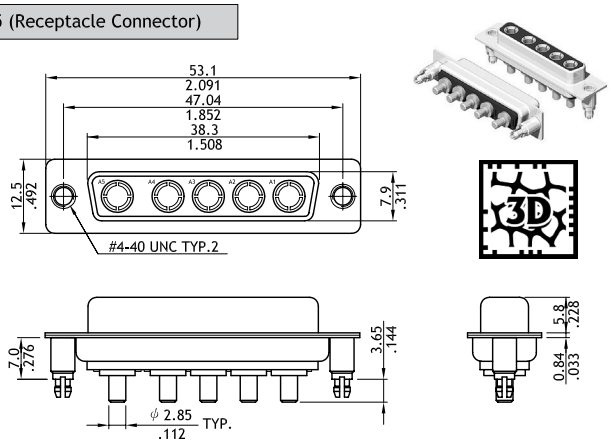

13W3 (Plug Connector)

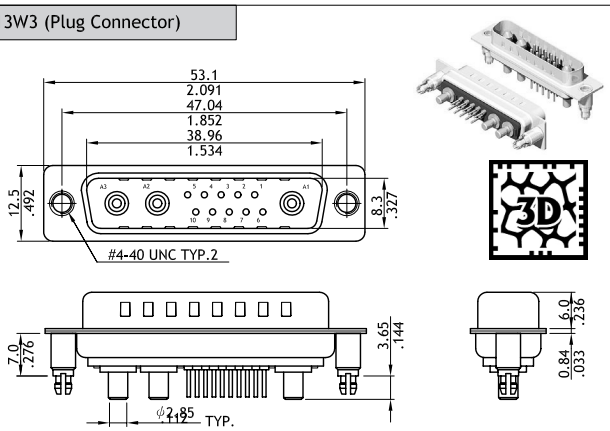

13W3 (Receptacle Connector)

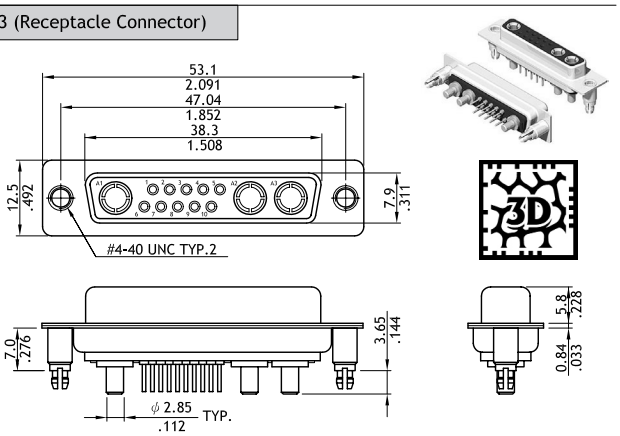

17W2 (Plug Connector)

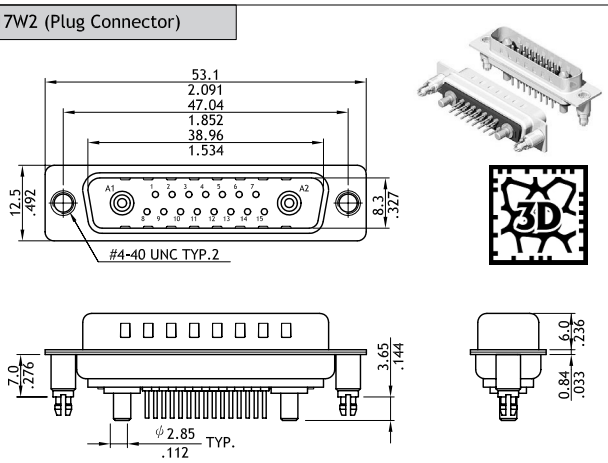

17W2 (Receptacle Connector)

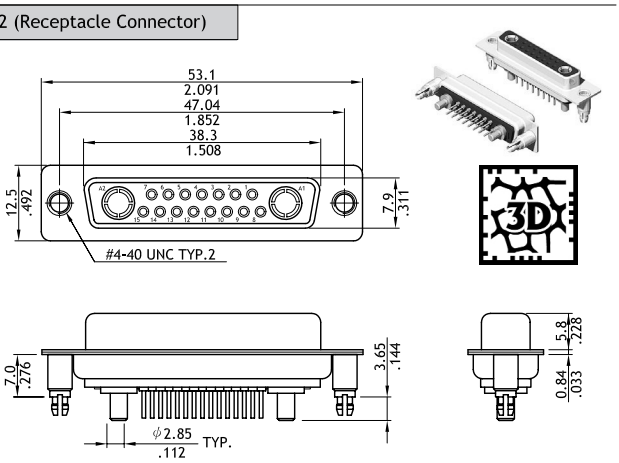

C8W8 (Plug Connector)

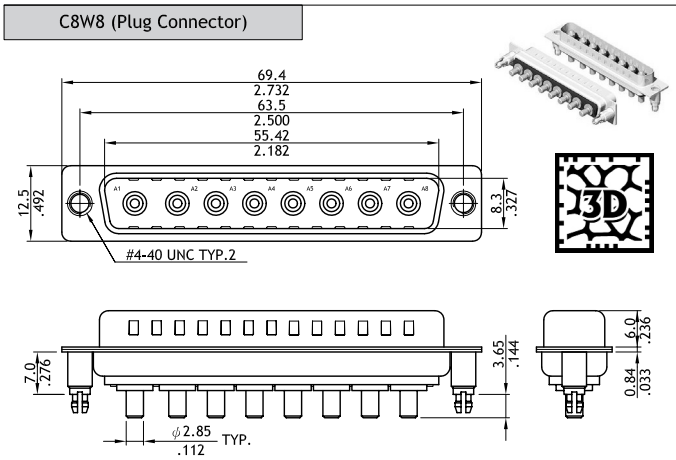

C8W8 (Receptacle Connector)

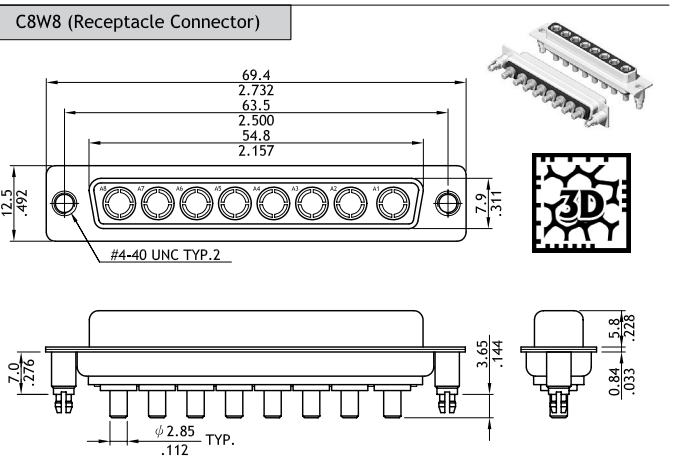

20A High Power Straight DIP Solder Combination D-Sub

21W4 (Plug Connector)

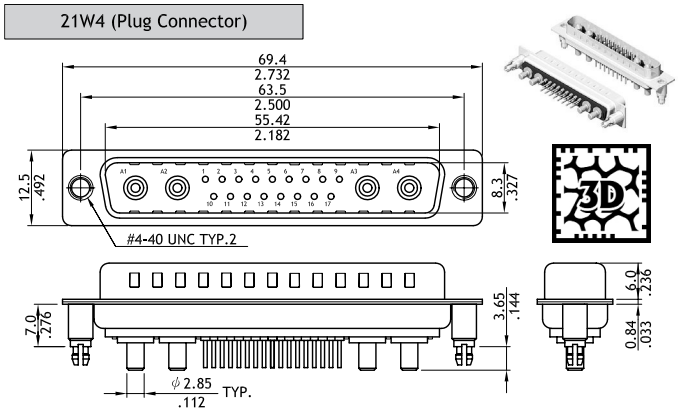

21W4 (Receptacle Connector)

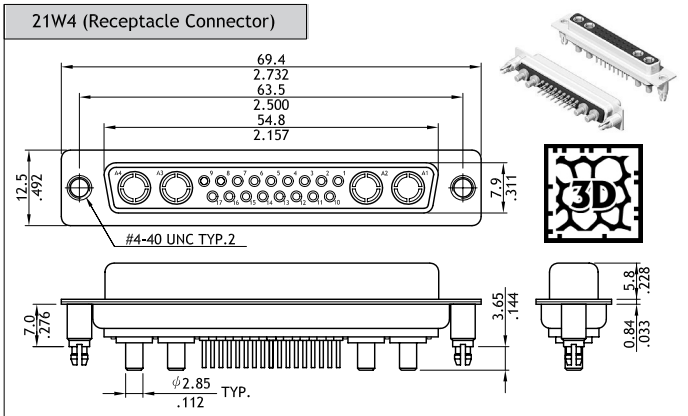

25W3 (Plug Connector)

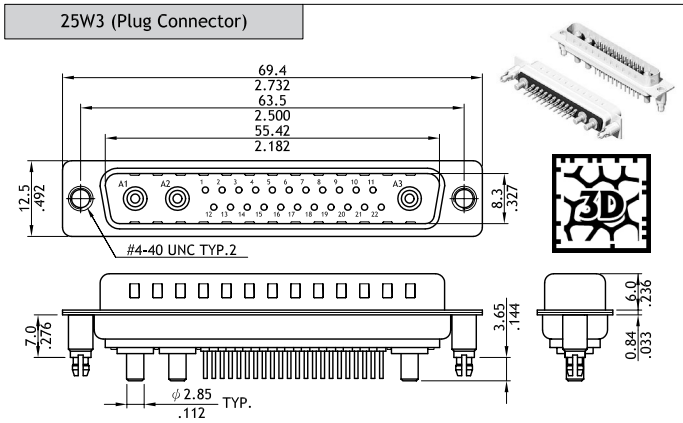

25W3 (Receptacle Connector)

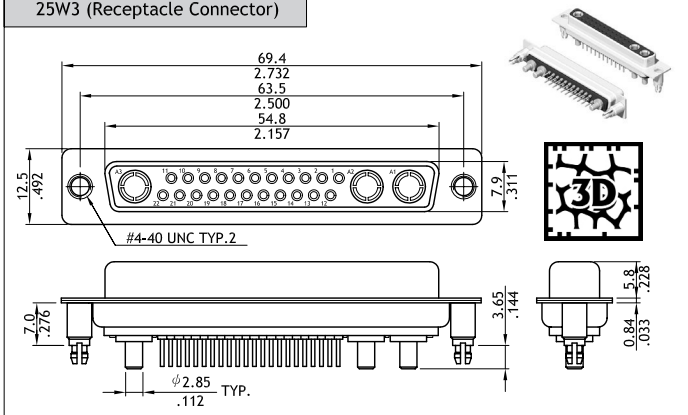

36W4 (Plug Connector)

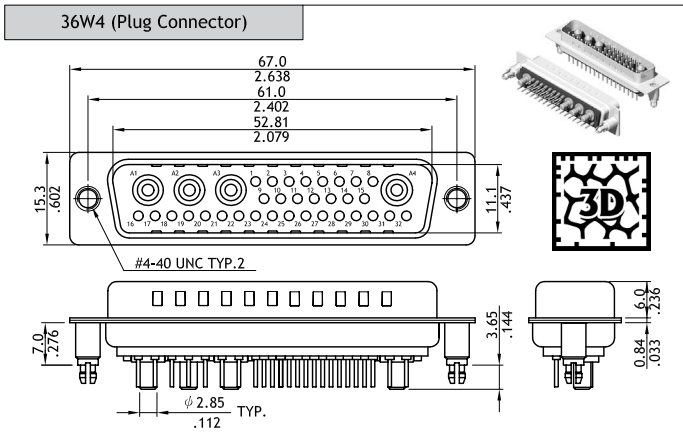

36W4 (Receptacle Connector)

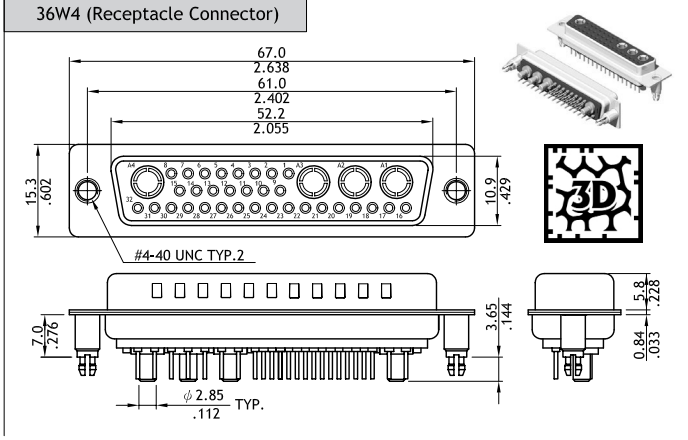

Ordering Code

❶	❷	❸	❹	❺	❻	❼	❽	❾
I 3 W 3	S	P	V	2	2	1	2 0	D 0 0

❶ Series No.: C3W3,3W3C,C7W2,11W1,C5W5,13W3
17W3,C8W8,21W4,25W3,36W4

❷ Connector Type: P = Plug
S = Receptacle

❸ Contact Type: P = High Power Contact

❹ Contact Tail Style: V = Straight DIP Type

❺ Coaxial Contact Plating: 2 = Gold flash over Nickel

❻ Signal Contact Plating: 2 = Gold flash over Nickel
0 = Without Signal Contact

❼ Insulator Color: 1 = Black

❽ Performance: 20 = 20A

❾ Mounting Style:
000 = With ϕ3.05mm holes on shell
A00 = Riveted #4-40 UNC Close nuts on Front shell
B00 = Riveted #4-40 UNC Open nuts on Front shell
C00 = Riveted #4-40 UNC Open nuts on Rear shell
D00 = Riveted #4-40 UNC Gound Stand-off (Standard)
*Special options consult manufacturer

40A High Power Straight DIP Solder Combination D-Sub

◎ Standard type with #4-40 UNC threaded ground stand-off
◎ Combined with stamped signal and machined 40A high power contacts
◎ For top entry connection
◎ Metal shell with ground indents
◎ Riveted Hex nuts or hardware accessories options available

RoHS Compliant

C3W3 (Plug Connector)

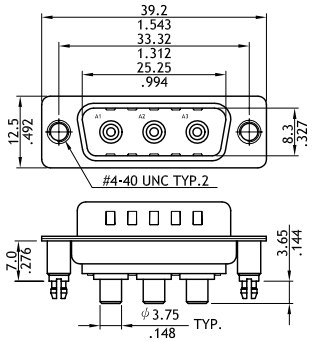

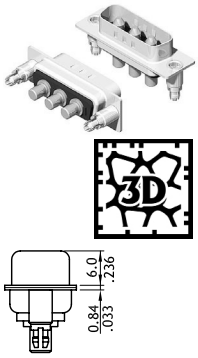

C3W3 (Receptacle Connector)

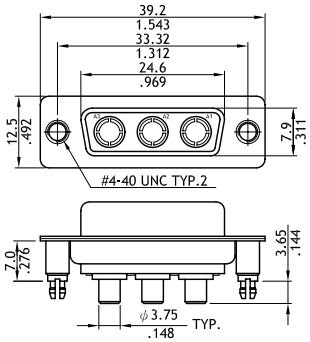

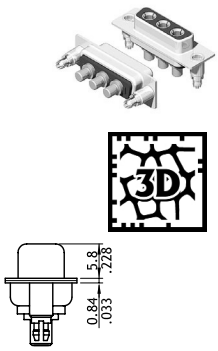

3W3C (Plug Connector)

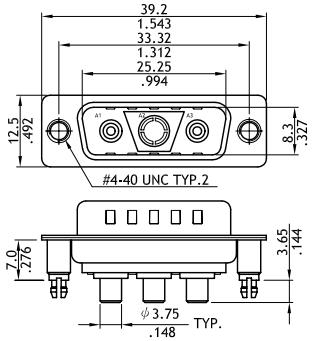

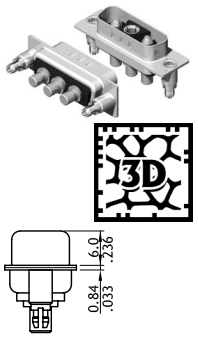

3W3C (Receptacle Connector)

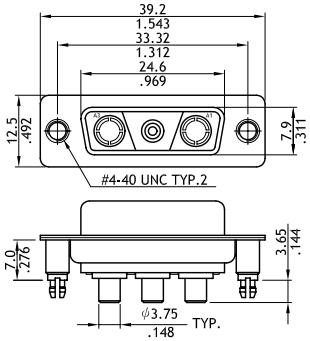

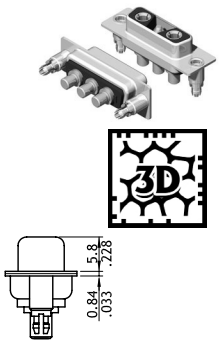

C7W2 (Plug Connector)

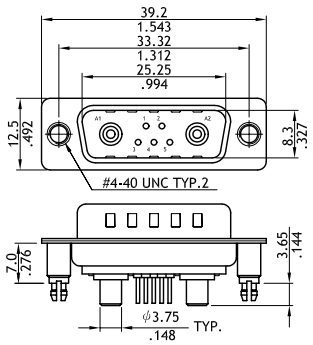

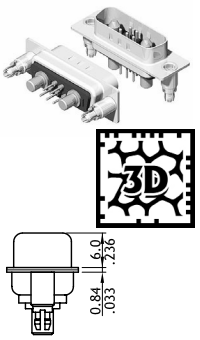

C7W2 (Receptacle Connector)

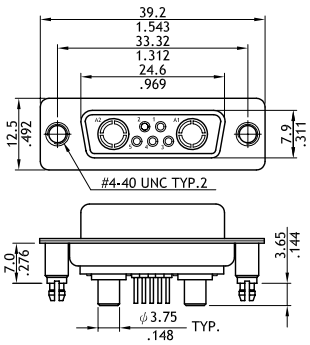

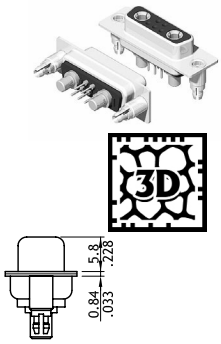

11W1 (Plug Connector)

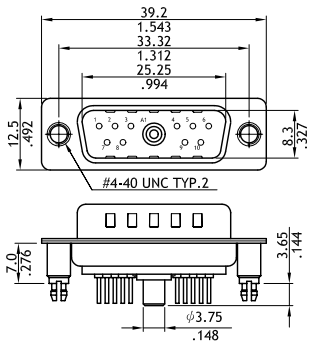

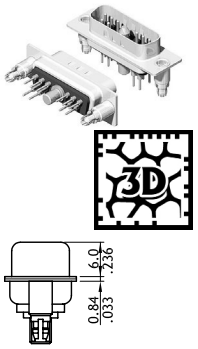

11W1 (Receptacle Connector)

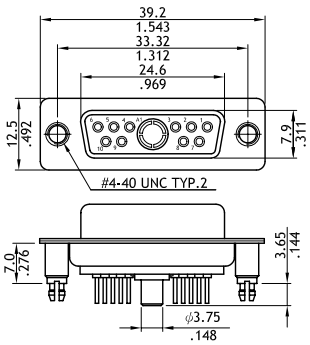

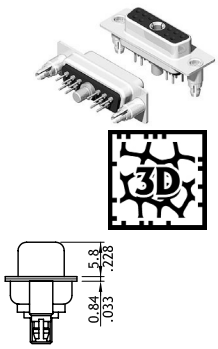

40A High Power Straight DIP Solder Combination D-Sub

C5W5 (Plug Connector)

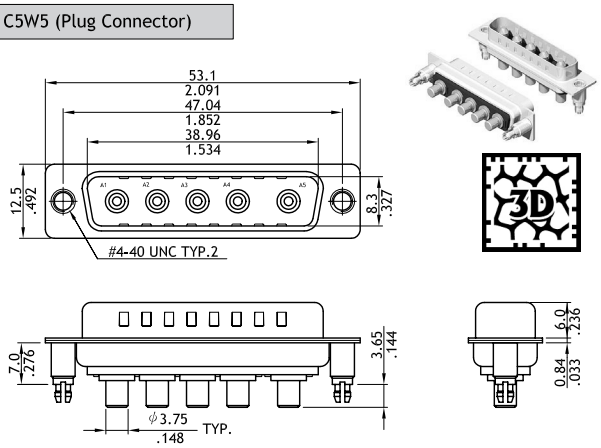

C5W5 (Receptacle Connector)

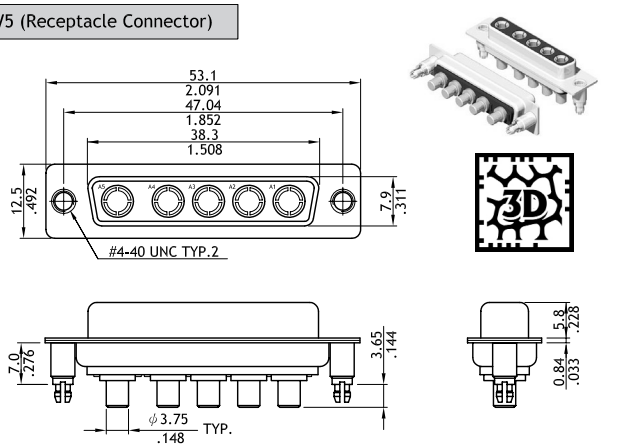

13W3 (Plug Connector)

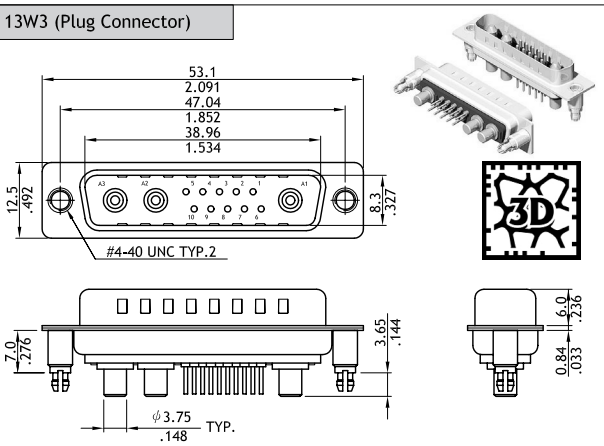

13W3 (Receptacle Connector)

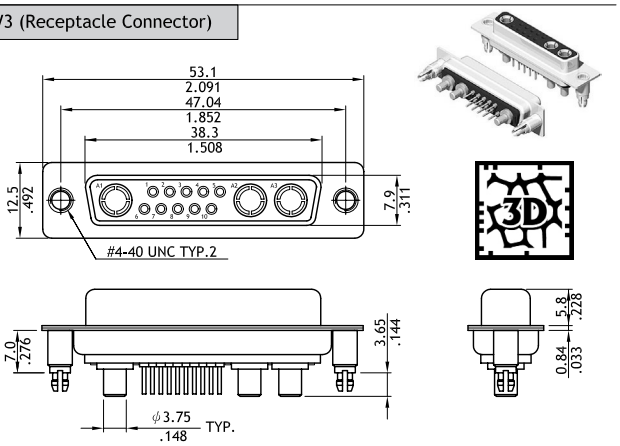

17W2 (Plug Connector)

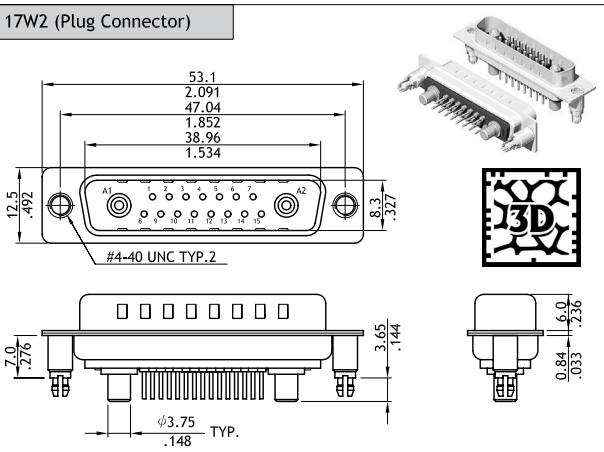

17W2 (Receptacle Connector)

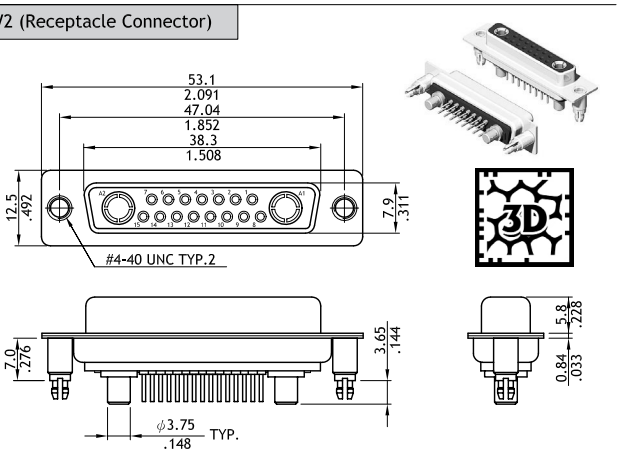

C8W8 (Plug Connector)

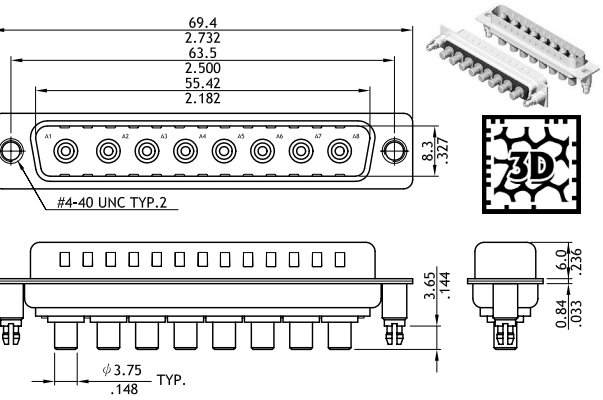

C8W8 (Receptacle Connector)

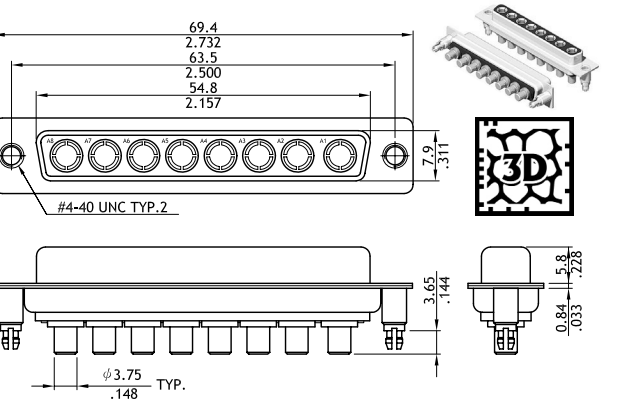

40A High Power Straight DIP Solder Combination D-Sub

21W4 (Plug Connector)

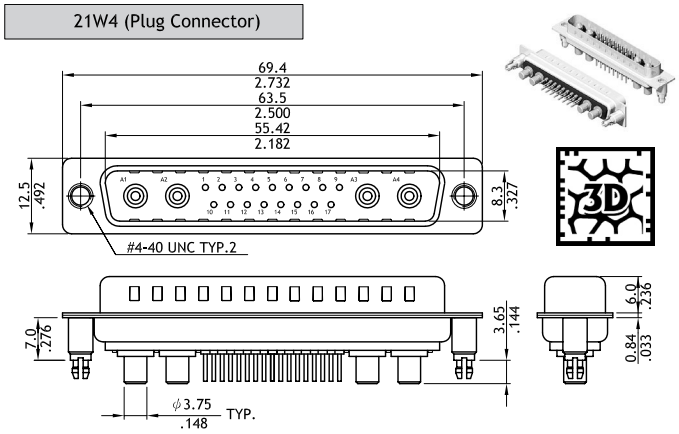

21W4 (Receptacle Connector)

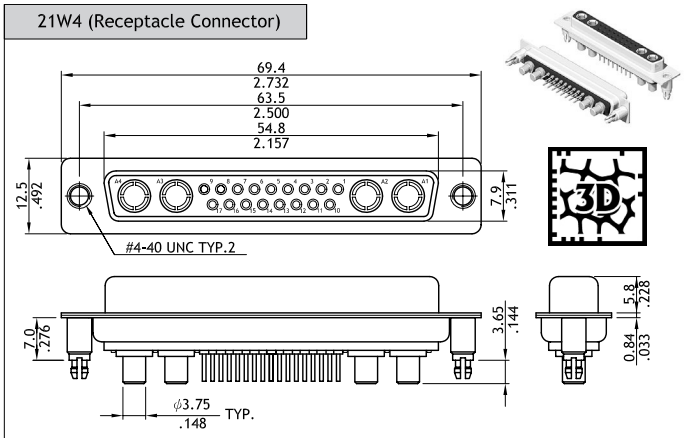

25W3 (Plug Connector)

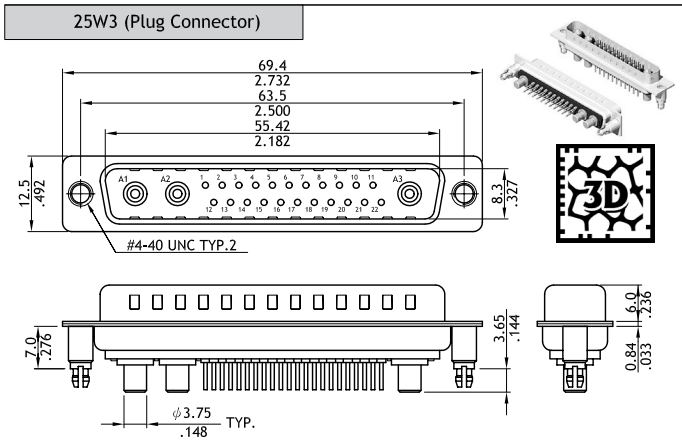

25W3 (Receptacle Connector)

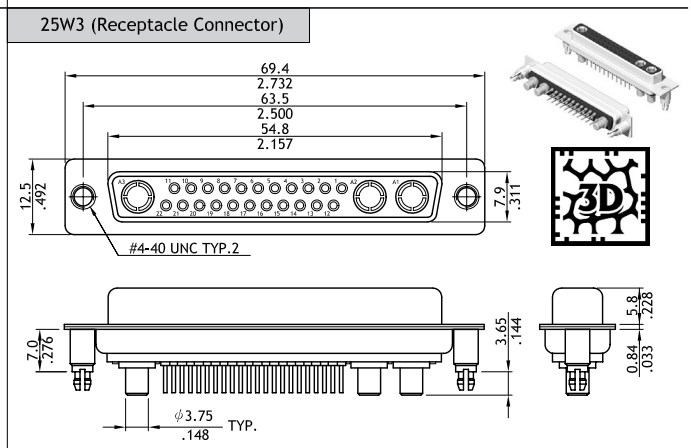

36W4 (Plug Connector)

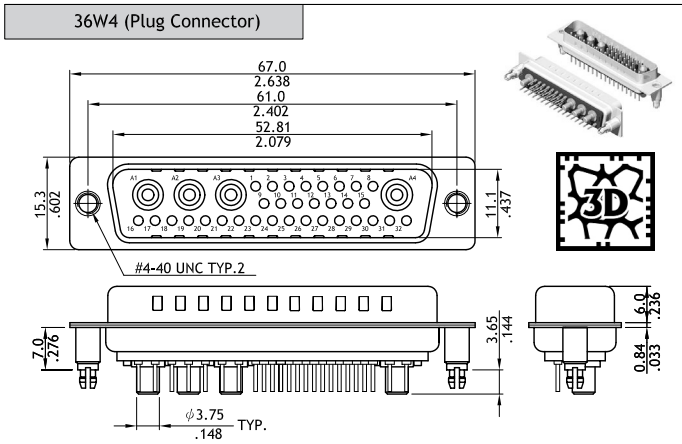

36W4 (Receptacle Connector)

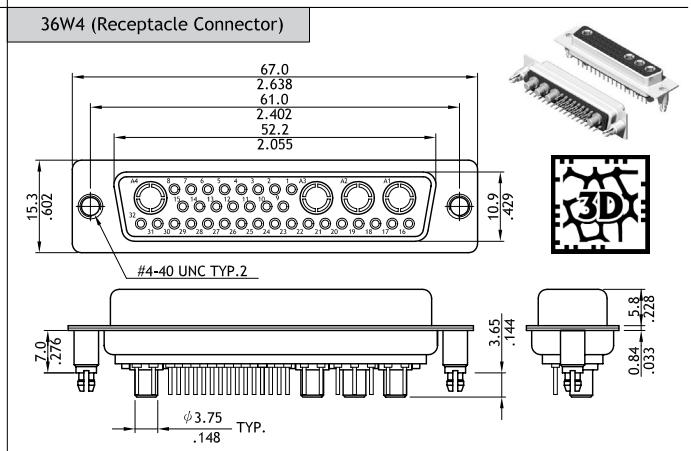

Ordering Code

❶	❷	❸	❹	❺	❻	❼	❽	❾
I 3W 3	S	P	V	2	2	1	4 0	D 0 0

❶ Series No.: C3W3,3W3C,C7W2,11W1,C5W5,13W3
17W3,C8W8,21W4,25W3,36W4

❷ Connector Type: P = Plug
S = Receptacle

❸ Contact Type: P = High Power Contact

❹ Contact Tail Style: V = Straight DIP Type

❺ High Power Contact Plating: 2 = Gold flash over Nickel

❻ Signal Contact Plating: 2 = Gold flash over Nickel
0 = Without Signal Contact

❼ Insulator Color: 1 = Black

❽ Performance: 40 = 40A

❾ Mounting Style:
000 = With ϕ3.05mm holes on shell
A00 = Riveted #4-40 UNC Close nuts on Front shell
B00 = Riveted #4-40 UNC Open nuts on Front shell
C00 = Riveted #4-40 UNC Open nuts on Rear shell
D00 = Riveted #4-40 UNC Gound Stand-off (Standard)
*Special options consult manufacturer

20A High Power Right Angle DIP Combination D-Sub

- ◎ Standard type with #4-40 UNC threaded ground tabs and board locks to secure connector on board
- ◎ Combined with stamped signal and 20A high power contacts
- ◎ For side entry connection
- ◎ Metal shell with ground indents
- ◎ Riveted Hex nuts or hardware accessories options available

RoHS Compliant

C3W3 (Plug Connector)

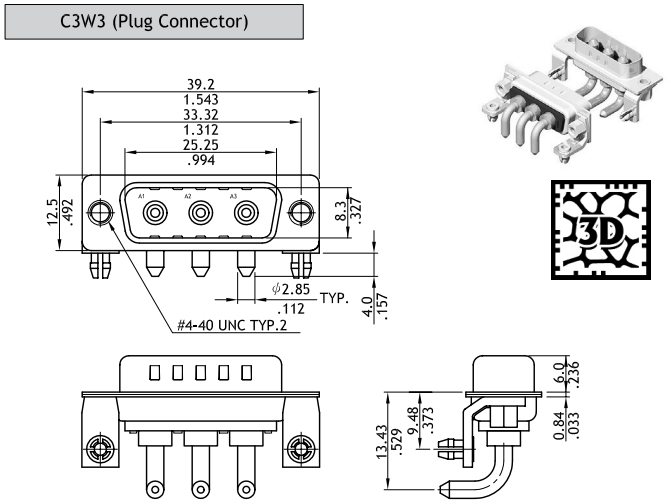

C3W3 (Receptacle Connector)

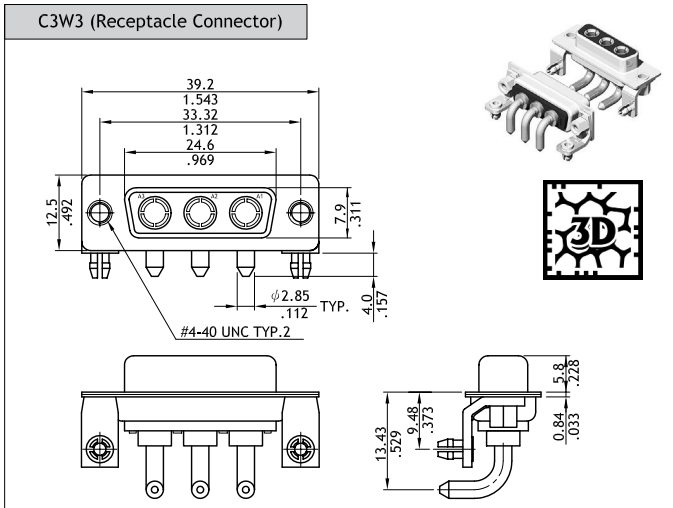

3W3C (Plug Connector)

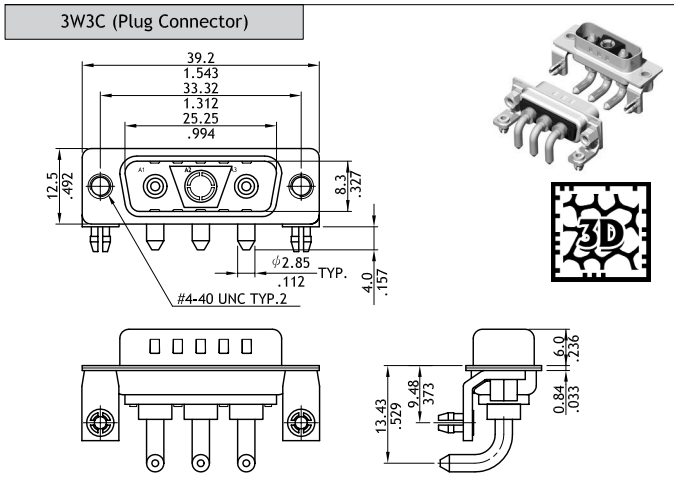

3W3C (Receptacle Connector)

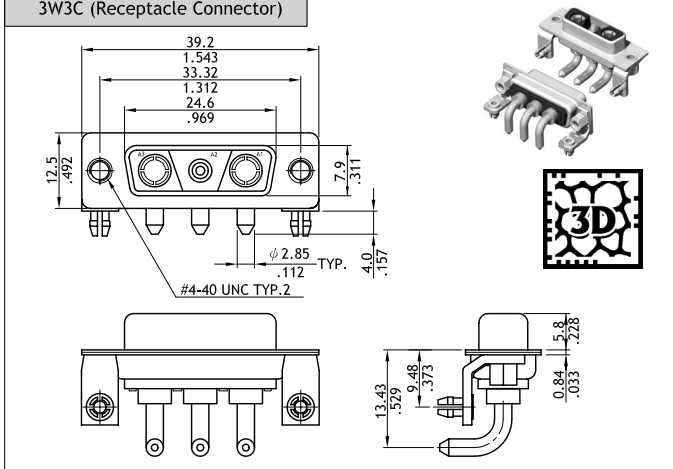

C7W2 (Plug Connector)

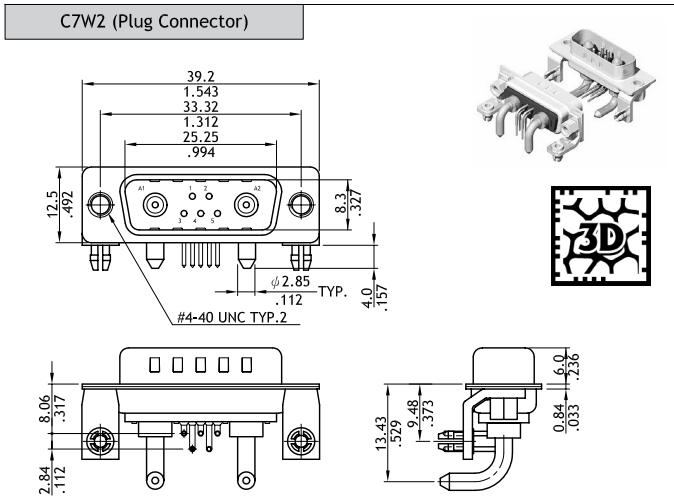

C7W2 (Receptacle Connector)

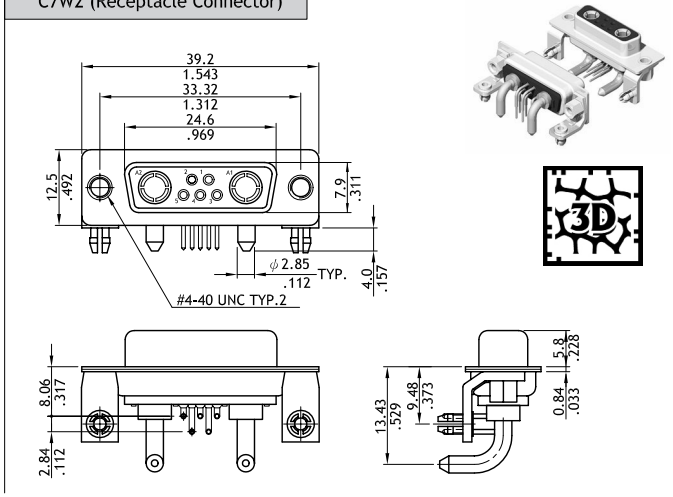

20A High Power Right Angle DIP Combination D-Sub

11W1 (Plug Connector)

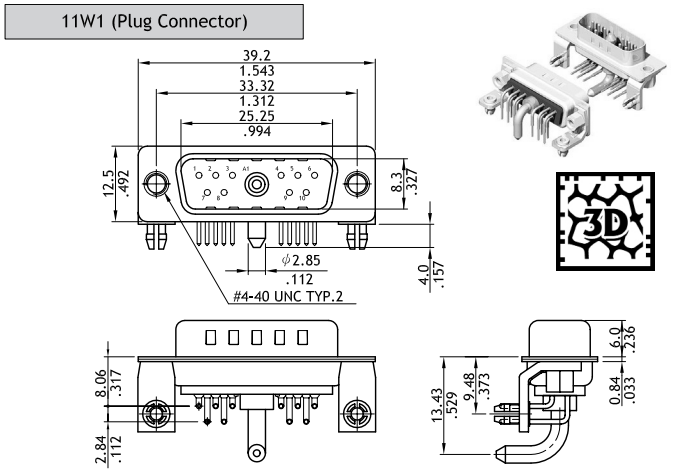

11W1 (Receptacle Connector)

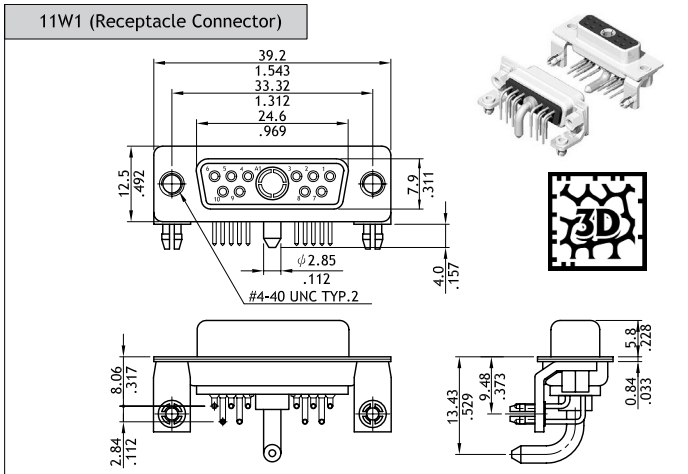

C5W5 (Plug Connector)

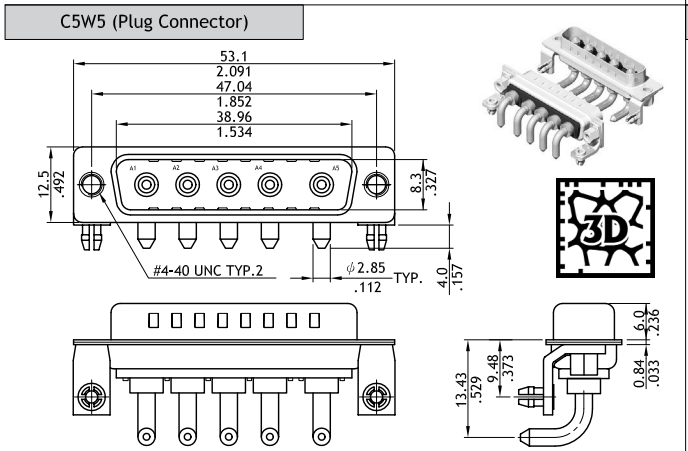

C5W5 (Receptacle Connector)

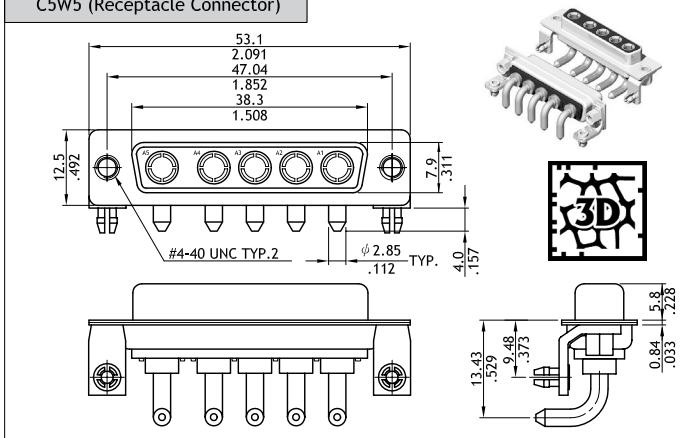

13W3 (Plug Connector)

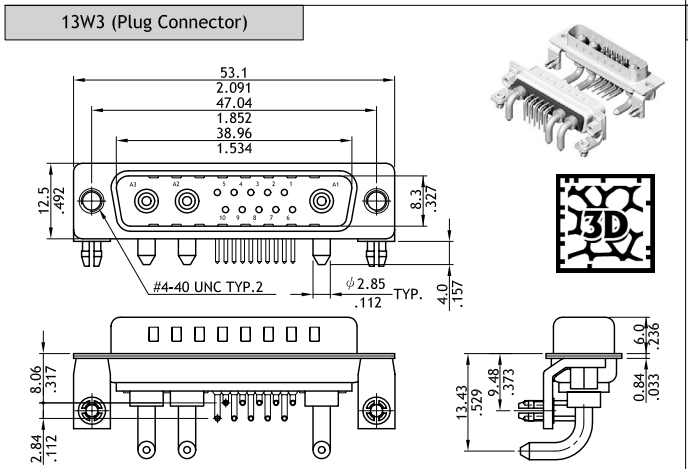

13W3 (Receptacle Connector)

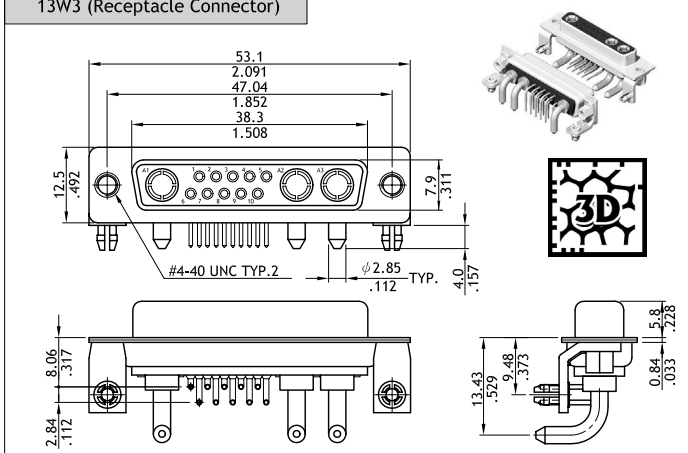

17W2 (Plug Connector)

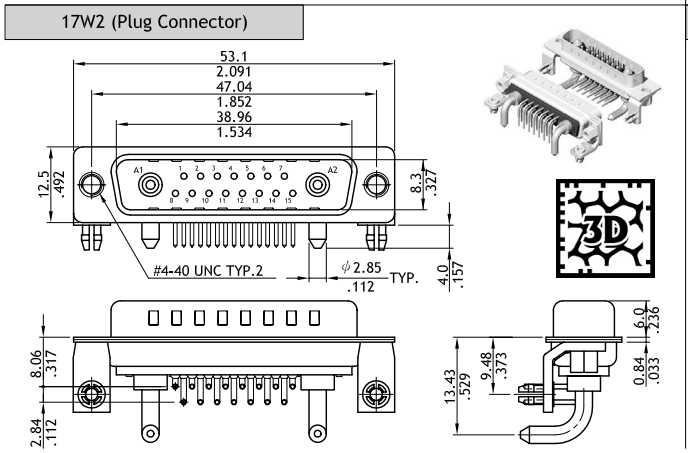

17W2 (Receptacle Connector)

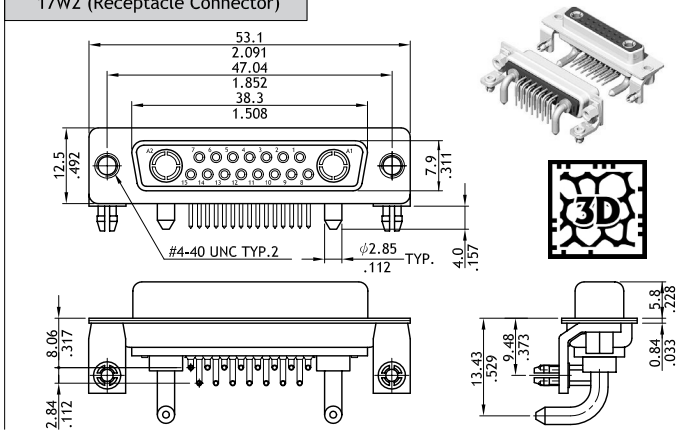

20A High Power Right Angle DIP Combination D-Sub

C8W8 (Plug Connector)

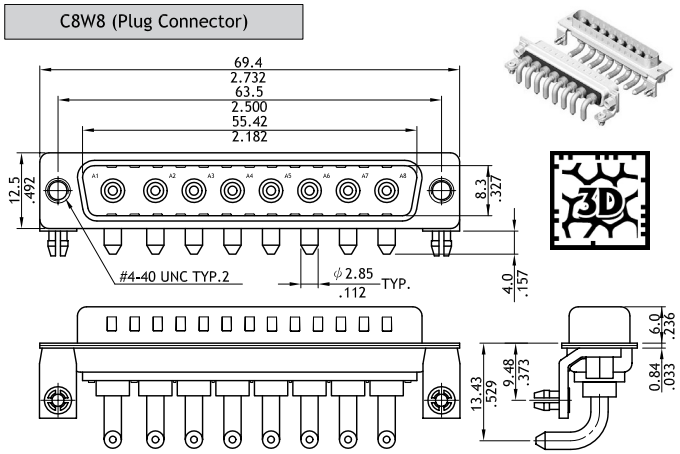

C8W8 (Receptacle Connector)

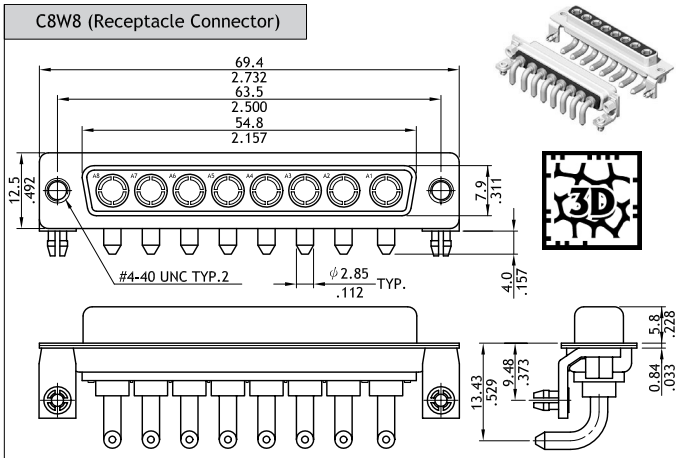

21W4 (Plug Connector)

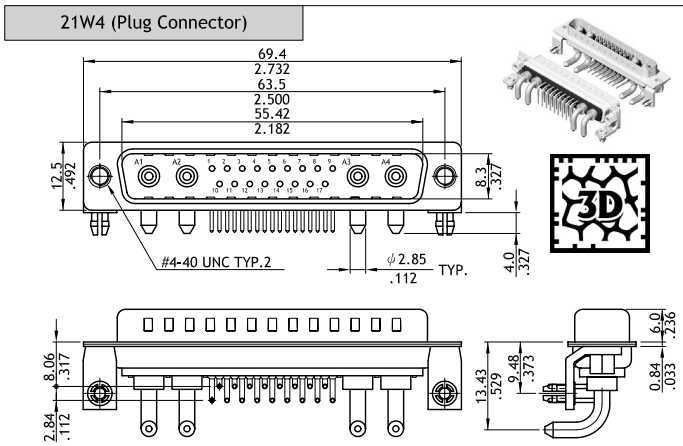

21W4 (Receptacle Connector)

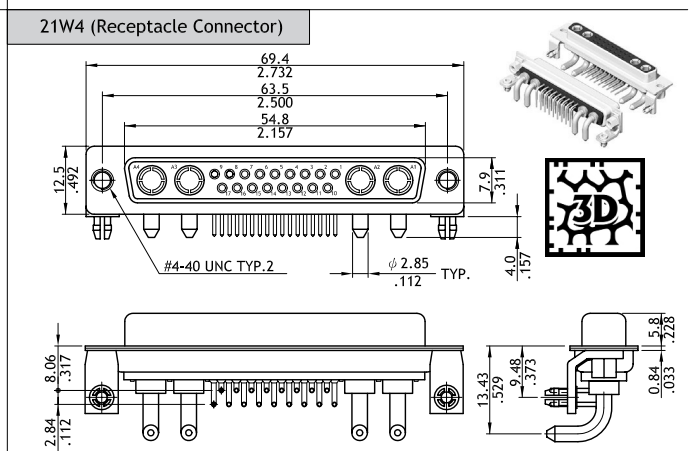

25W3 (Plug Connector)

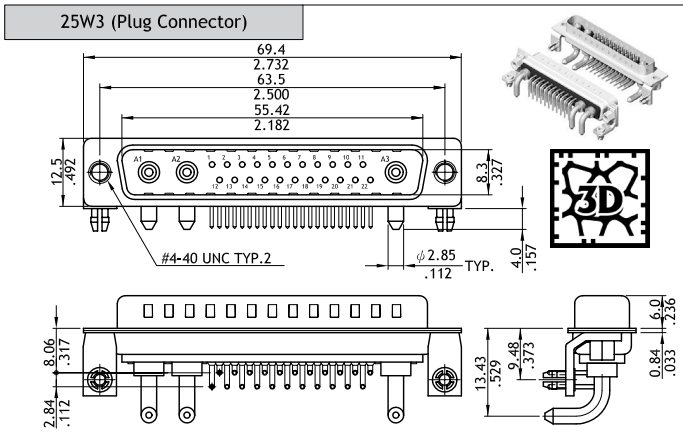

25W3 (Receptacle Connector)

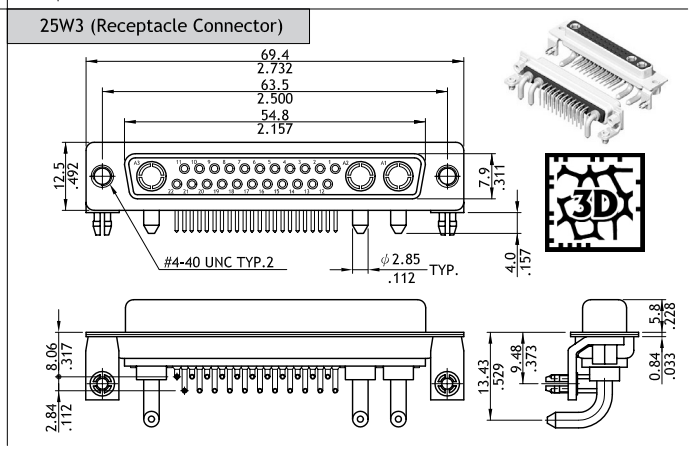

Ordering Code

❶	❷	❸	❹	❺	❻	❼	❽	❾
I 3W 3	S	P	H	2	2	1	2 0	I 1 0

❶ Series No.: C3W3,3W3C,C7W2,11W1,C5W5,13W3
17W3,C8W8,21W4,25W3,36W4

❷ Connector Type: P = Plug
S = Receptacle

❸ Contact Type: P = High Power Contact

❹ Contact Tail Style: H = Right Angle DIP Type

❺ High Power Contact Plating: 2 = Gold flash over Nickel

❻ Signal Contact Plating: 2 = Gold flash over Nickel
0 = Without Signal Contact

❼ Insulator Color: 1 = Black

❽ Performance: 20 = 20A

❾ Mounting Style:
000 = With ϕ3.05mm holes on shell
B00 = Riveted #4-40 UNC Open nuts on Front shell
C00 = Riveted #4-40 UNC Open nuts on Rear shell
I00 = Riveted #4-40 UNC Ground tabs with ϕ3.2mm holes
I10 = Riveted #4-40 UNC Gound tabs with board locks
(Standard) *Special options consult manufacturer

40A High Power Right Angle DIP Combination D-Sub

◎ Standard type with #4-40 UNC threaded ground tabs and board locks to secure connector on board
◎ Combined with stamped signal and 40A high power contacts
◎ For side entry connection
◎ Metal shell with ground indents
◎ Riveted Hex nuts or hardware accessories options available

RoHS Compliant

C3W3 (Plug Connector)

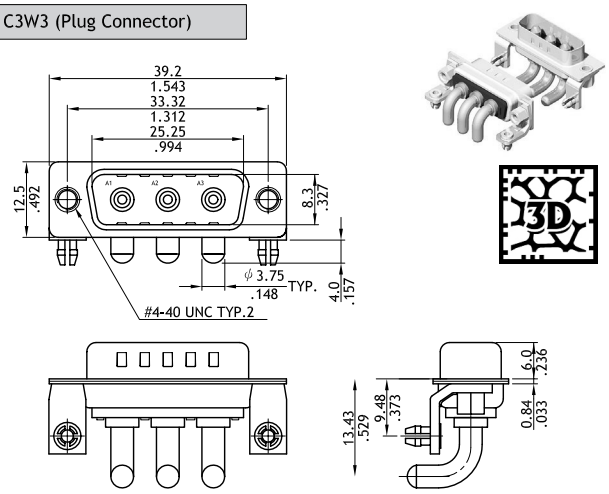

C3W3 (Receptacle Connector)

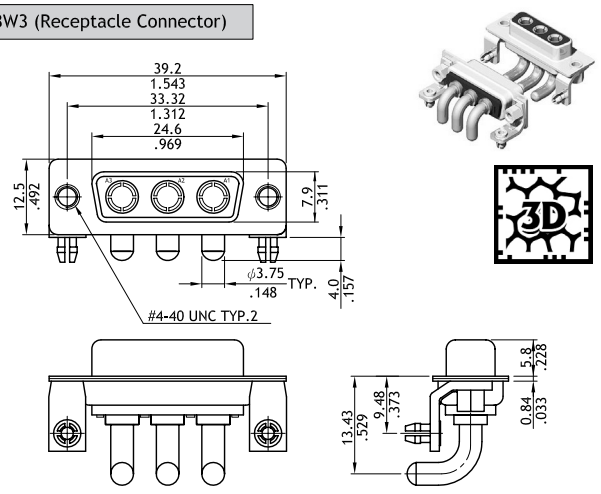

3W3C (Plug Connector)

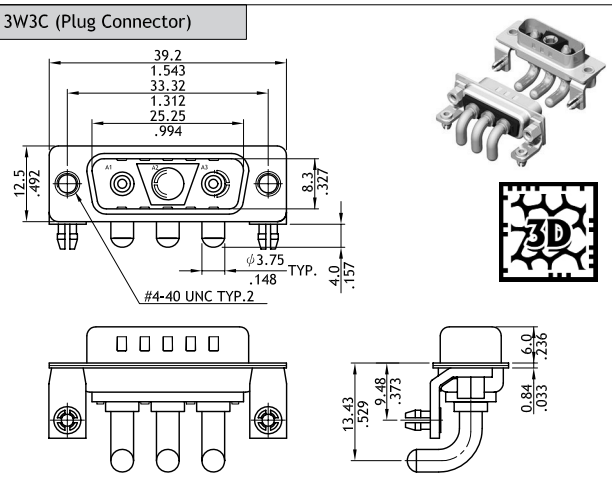

3W3C (Receptacle Connector)

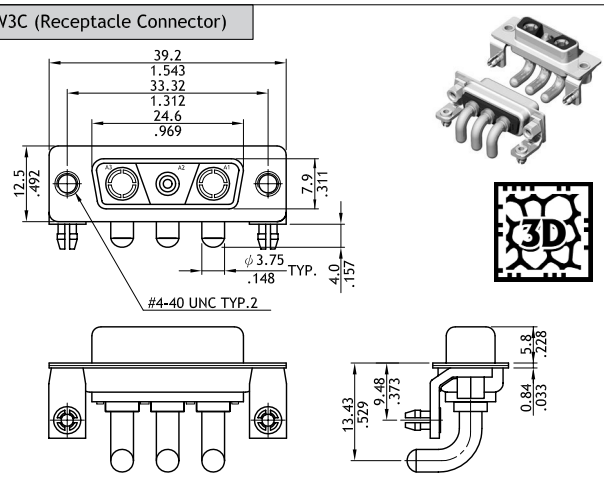

C7W2 (Plug Connector)

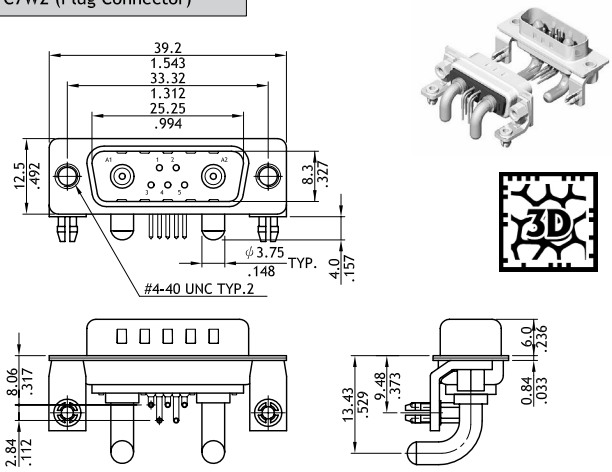

C7W2 (Receptacle Connector)

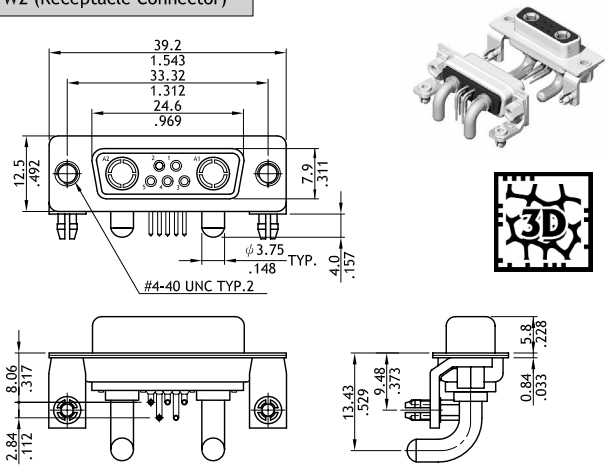

40A High Power Right Angle DIP Combination D-Sub

11W1 (Plug Connector)

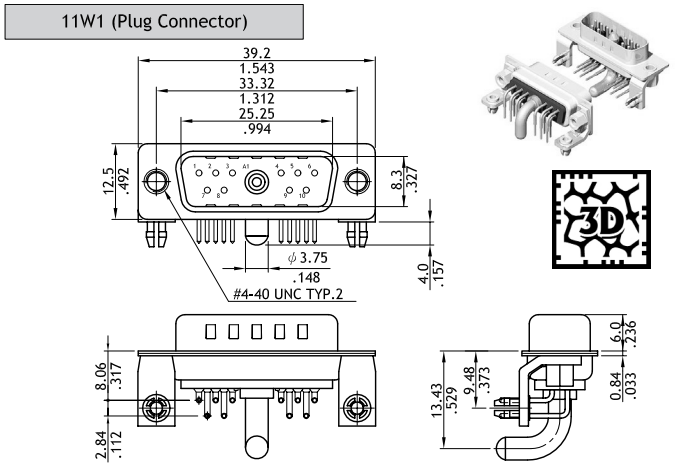

11W1 (Receptacle Connector)

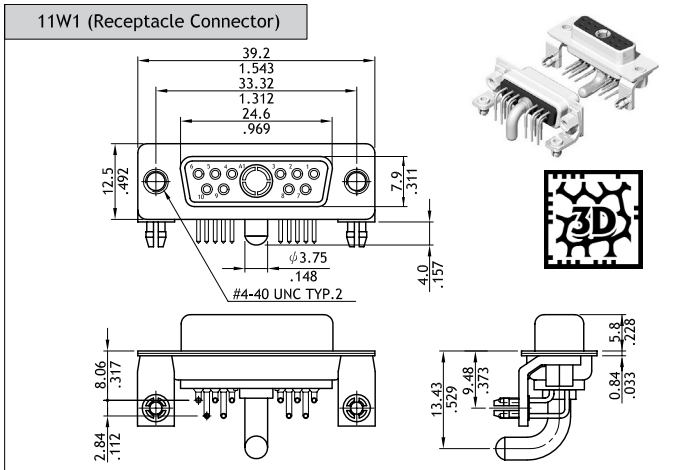

C5W5 (Plug Connector)

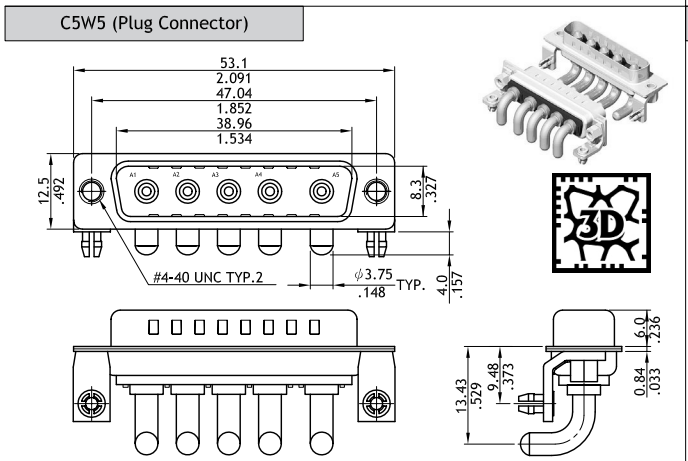

C5W5 (Receptacle Connector)

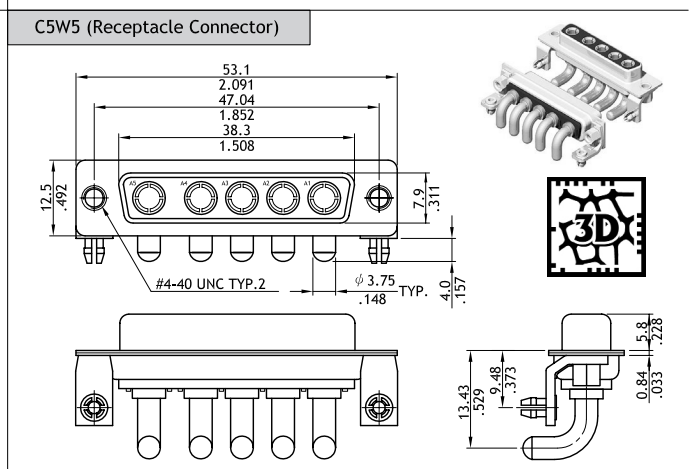

13W3 (Plug Connector)

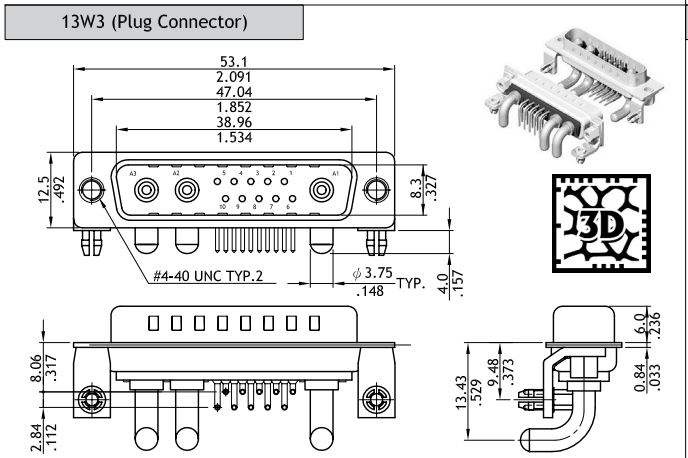

13W3 (Receptacle Connector)

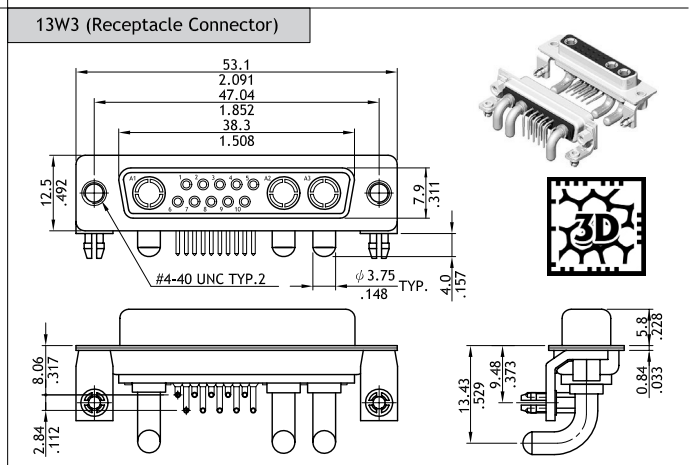

17W2 (Plug Connector)

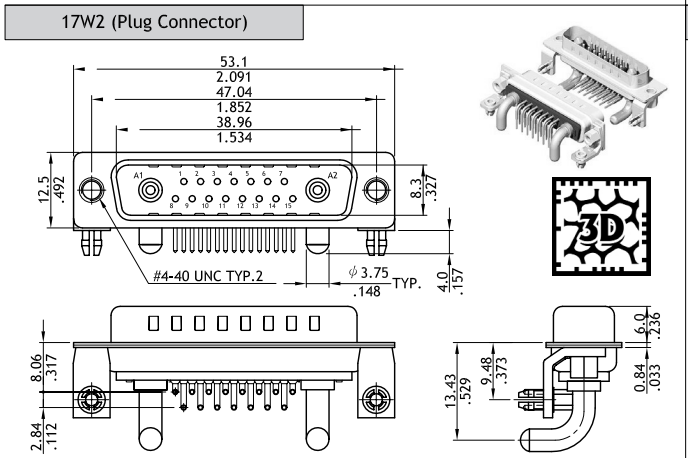

17W2 (Receptacle Connector)

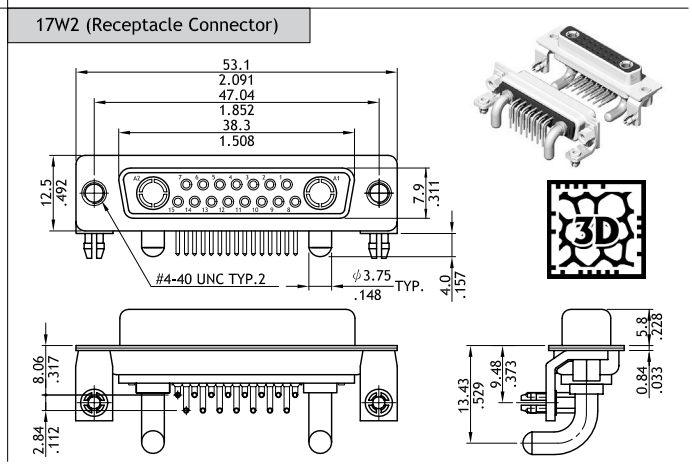

40A High Power Right Angle DIP Combination D-Sub

C8W8 (Plug Connector)

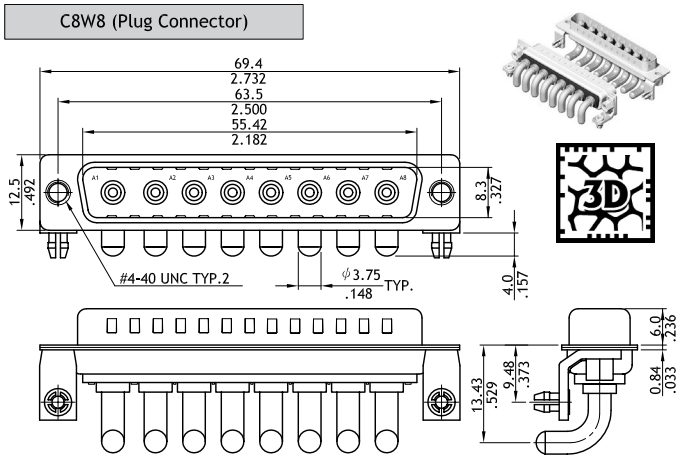

C8W8 (Receptacle Connector)

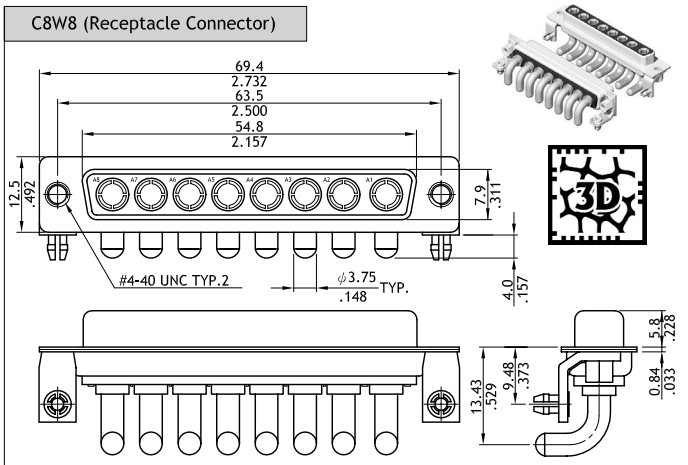

21W4 (Plug Connector)

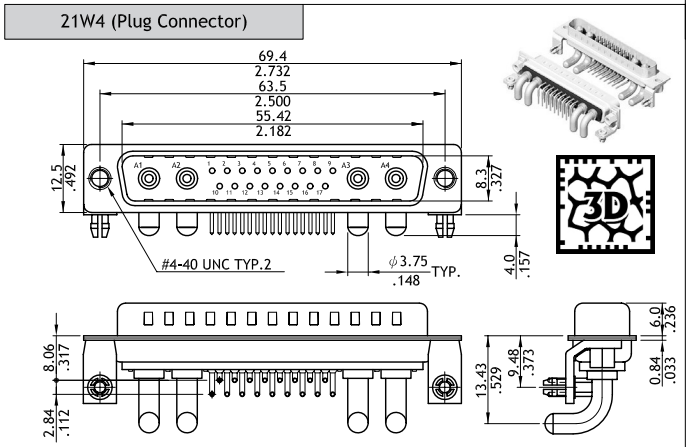

21W4 (Receptacle Connector)

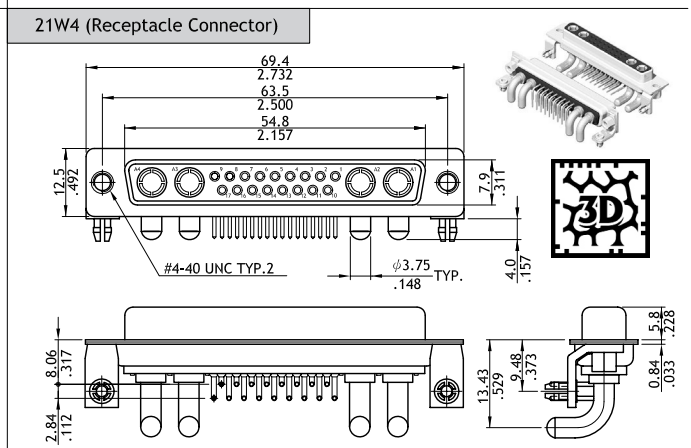

25W3 (Plug Connector)

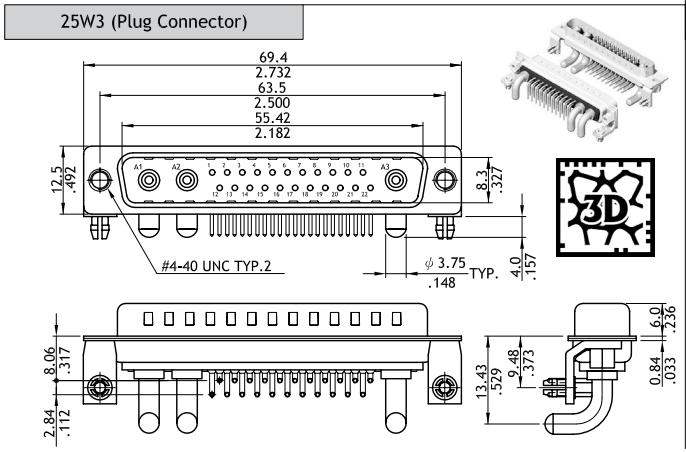

25W3 (Receptacle Connector)

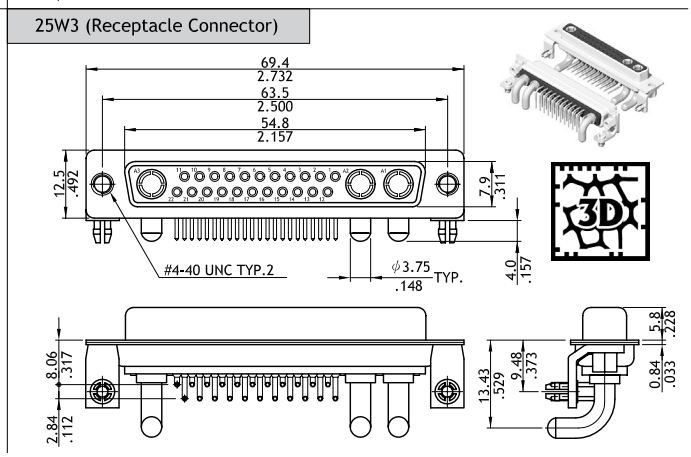

Ordering Code

❶	❷	❸	❹	❺	❻	❼	❽	❾
I 3W 3	S	P	H	2	2	1	4 0	I 1 0

❶ Series No.: C3W3,3W3C,C7W2,11W1,C5W5,13W3
17W3,C8W8,21W4,25W3,36W4

❷ Connector Type: P = Plug
S = Receptacle

❸ Contact Type: P = High Power Contact

❹ Contact Tail Style: H = Right Angle DIP Type

❺ High Power Contact Plating: 2 = Gold flash over Nickel

❻ Signal Contact Plating: 2 = Gold flash over Nickel
0 = Without Signal Contact

❼ Insulator Color: 1 = Black

❽ Performance: 40 = 40A

❾ Mounting Style:
000 = With ϕ3.05mm holes on shell
B00 = Riveted #4-40 UNC Open nuts on Front shell
C00 = Riveted #4-40 UNC Open nuts on Rear shell
I00 = Riveted #4-40 UNC Ground tabs with ϕ3.2mm holes
I10 = Riveted #4-40 UNC Gound tabs with board locks
(Standard) *Special options consult manufacturer