A distributed automation system does not contain any central automated control cabinets. Controls, sensors and actuators are designed for a high degree of protection (IP 65 / IP 67) and are installed directly in the field. In connection with these innovative installation concepts with distributed devices, users are demanding a standard connector family that is compatible with all interfaces. In response to these needs, the HARTING PushPull series has set the respective new appliance connection standard. PushPull technology is available for data, signal and power applications. Other interfaces accommodating USB or fiber optics (LC, SCRJ) supplement the universal range of the PushPull solutions. The integration of communication and power lines in a hybrid PushPull connector is a genuine trend-setting advance. In view of these strengths, the PushPull container has become the standard for current and future appliance interfaces. The German automotive industry, for example, has opted for the implementation of the PushPull connector family.

Application profile:

CONNECTION TYPE		ENVIRONMENT		APPLICATION						
							high performance			
Board to Board	Cable/ Wire to Board	IP 20	IP 65 / IP 67	Data	Signal	Power	Data transfer rate	Shielding	Number of contacts, contact density	Voltage, working current
	●		●	●	●	●	●	●		●

Cable termination

Han-Quick Lock® — *IDC HARAX®* — *Crimp*

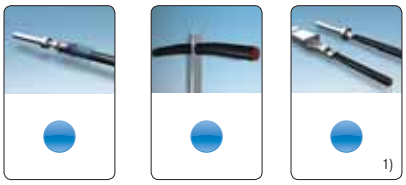

Screw — *Cage clamp* — *Axial screw*

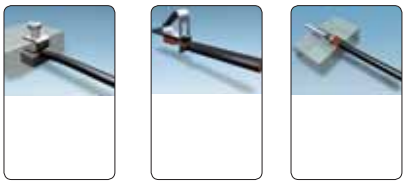

PCB termination

THT — *SMC* — *SMT*

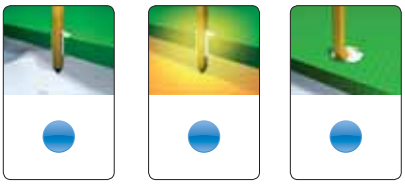

Press-in

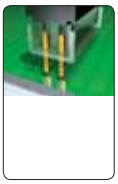

Application standard

ISO IEC 24702 — EtherCAT Technology Group — Ethernet POWERLINK

Housing integration

Separate housing — *Integrated housing*

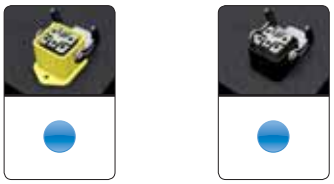

[1] Piercing contacts

CONTENTS PAGE

Introduction PushPull termination technology	02.02
HARTING PushPull type acc. to IEC 61 076-3-106 variant 4	
HARTING PushPull – housing bulkhead mounting for device integration	02.04
HARTING PushPull RJ45	02.05
HARTING PushPull LC duplex	02.08
HARTING PushPull Hybride – Introduction	02.10
HARTING PushPull Hybride	02.11
HARTING PushPull Power – Introduction	02.14
HARTING PushPull Power, 4-poles, 48 V (12 A)	02.15
HARTING PushPull Power, 3-poles, 250 V (16 A)	02.17
HARTING PushPull Power – Tooling	02.18
Han® PushPull type acc. to IEC/PAS 61 076-3-117 variant 14	
Han® PushPull RJ45	02.19
Han® PushPull SCRJ	02.21
Han® PushPull Power 4/0, 5-poles, 230/400 V (16 A)	02.23
Han® PushPull Power 4/0 – Contacts and toolings	02.25
Han® PushPull Power L 4/0, 5-poles, 24 V (16 A)	02.26

The PushPull connector housing is a function container with degree of protection IP 65 / IP 67 and is available in two standardized housing sizes. These containers are equipped with standard RJ45, FOC or power contacts for operation at 5 x 16 A, depending on application requirements. The PushPull connector can be delivered either as plastic, or as metal variant, depending on the installation environment.

THE PushPull PRINCIPLE

PushPull connector applications combine two basic advantages:

1. Simple operation
2. Safe and vibration resistant sealed IP 65 / IP 67 connection.

The innovative PushPull lock mechanism dispenses with the need for a latching bracket. The connector can be inserted with one hand, minimum force and an audible click for safe operation. The connection can be removed again just as easily for service work.

COPPER, FOC AND POWER – IN THE SAME DESIGN

HARTING offers two series of the PushPull connector system, which differ in terms of their outer dimensions and module inserts.

HAN® PushPull (IEC/PAS 61 076-3-117 VARIANT 14)

This series represents the standard PROFINET device interface for the IP 67 environment of the German automobile manufacturing industry.

The connector is available as metal and as plastic version. The RJ45 module for copper conductors and the SCRJ module for FOCs are available as data connectors. The RJ45 variant is realized by means of the RJ Industrial module equipped with HARAX® quick connection technology. The power module which is installed in the same container can be assembled on-site, either with crimp contacts or with innovative Quick Lock® technology in order to wire the distributed field devices to 230/400 V (16 A) power. This 5-pole connector enables the transfer of two

independent 24 V control circuits with functional ground, or the transfer of a three-phase voltage of 400 V (16A).

HARTING PushPull (IEC 61 076-3-106 VARIANT 4)

This extremely compact and space-saving series provides an Ethernet appliance connection with degree of protection IP 65 / IP 67 that requires no more installation space than a M12 connector. The RJ45 variant for copper conductors and the LC variant for FOCs are available as modules for data connectors. The RJ45 variant is realized by means of HARAX® quick connection technology as used with HARTING RJ Industrial®. The 4-pole module for 48 V (12 A) or the 3-pole module for 250 V (16 A) can be used to supply power to the distributed field devices.

HARTING PushPull HYBRID

The migration from Fieldbus to Ethernet within communication technology has simplified machine installation options. This simplification is attained by combining the data and the 24 V power lines in a single hybrid cable with hybrid connector, in connection with the spatial requirements of an M12 connector. The HARTING PushPull Hybrid offers trend-setting connection technology for this new method of machine installation.
The PushPull Hybrid reduces everything by half: the number of connection points and cables, and spatial requirements for the connection technology.
The PushPull Hybrid makes everything easier: machine installation, the wiring of connectors and safe insertion.

APPLIANCE INTEGRATION:

In order to support the implementation of appliances with degree of protection IP 65 / IP 67, HARTING offers panel feed-through devices with integrated couplings and female contact modules for direct mounting on PCBs.

HARTING PushPull
ONE CONCEPT FOR DATA, SIGNAL AND POWER

The internationally standardized PushPull connector represents the latest generation of appliance connection technology with high degree of protection IP 65 / IP 67, easy insertion and snap-action engagement with audible click.
The PushPull housing family is designed for the integration of a wide range of contact inserts for data, signal and power lines.

INSTALLATION IN PLANTS
WITH HAN® PushPull CONNECTORS:

- The standard for PROFINET communication
- One housing for the electrical and optical data transfer and for power supply
- Plastic or metal housing variants

INSTALLATION IN MACHINES
WITH HAN® PushPull HYBRID CONNECTORS:

- Combined data lines and appliance power supply up to 5 A in the same connector
- Compact size (comparable with M12)
- Straight and angled connector design, suitable for on-site assembly and overmolded

POWER SUPPLY TO DISTRIBUTED DEVICES
USING PushPull CONNECTORS:

- Variant 4: 48 V (12 A), 4-pole or 250 V (16 A), 3-pole
- Variant 14: 400 V (12 A) 5-pole, or 24 V (16 A) 5-pole
- Latest connection technology QuickLock® for on-site assembly without special auxiliary tools

HARTING PushPull Technology acc. to IEC 61076-3-106 variant 4
housing bulkhead mounting for device integration of RJ45- and Power-jacks

Advantages

- PushPull housing bulkhead mounting with HARTING PushPull technology
- Compact, space-saving design for device integration of RJ45- or Power-pcb female

Housing bulkhead mounting EasyInstall

- for simple device integration round panel cut out

Housing bulkhead mounting Compact

- high packing density (spacing 27 x 21 mm)

Technical characteristics

Locking	PushPull Technology acc. to IEC 61 076-3-106 variant 4
Transmission rate	10/100/1000 Mbit/s
Shielding	fully shielded, 360° shielding contact
Mating cycles	min. 750
Degree of protection	IP 65 / IP 67
Temperature range	– 40 °C up to + 70 °C
Housing material	Plastic, black
Flammability acc. to UL 94	V 0
	UL approval (E102079)

Identification	Part No.	Drawing	Dimensions in mm
Components device side			
Housing bulkhead mounting – EasyInstall with integrated seal board drillings for M3			
without fixing clip	09 45 545 0030	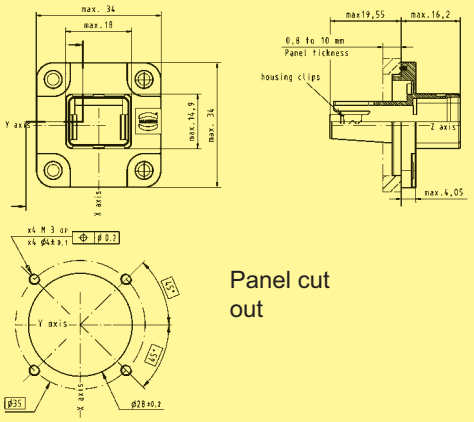	Panel cut out
with fixing clip	09 45 545 0031		
Housing bulkhead mounting – Compact incl. flat seal board drillings for M2.5			
without fixing clip	09 45 545 0023	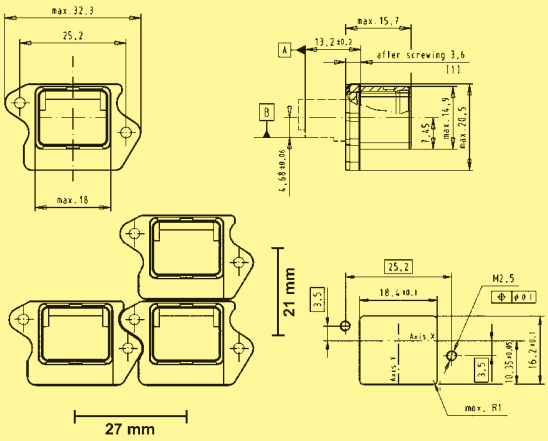	
with fixing clip	09 45 545 0021		

HARTING PushPull RJ45

HARTING PushPull Technology acc. to IEC 61 076-3-106 variant 4
RJ45 jacks and accessories

Advantages

- HARTING PushPull technology
- Low-profile jacks for space-saving PCB integration
- Category of transmission Cat. 5

Technical characteristics

Locking	PushPull Tecgnology acc. to IEC 61 076-3-106 variant 4
Transmission rate	10/100/1000 Mbit/s
Shielding	fully shielded, 360° shielding contact
Mating cycles	min. 750
Degree of protection	IP 65 / IP 67
Temperature range	– 40 °C up to + 70 °C
Housing material	Plastic, black
Flammability acc. to UL 94	V 0
	UL approval (E102079)

Identification	Part No.	Drawing	Dimensions in mm
Components device side			pcb layout
RJ45 females Cat. 5			
Solder variant SMD, 90° angled	09 45 551 1100[1)] 09 45 551 1110[2)]	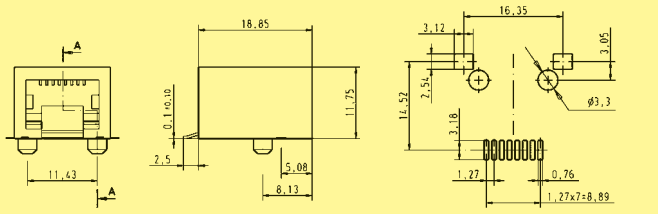	
Solder variant overmolded, 90° angled, with EMC contacts	09 45 551 1101[1)]	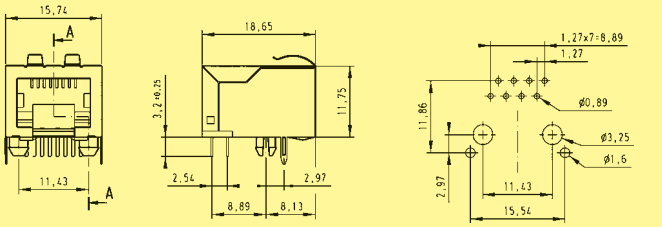	
Solder variant overmolded, 90° angled	09 45 551 1102[1)]	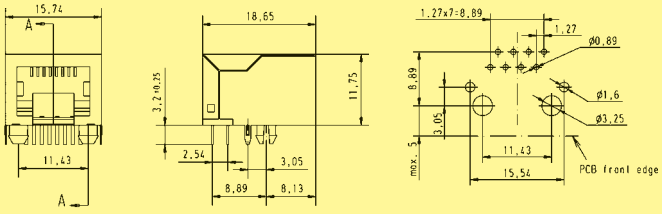	

[1)] Packaging: Blister à 120 pieces
[2)] Packaging: Tape & Reel à 130 pieces

HARTING PushPull RJ45

HARTING PushPull Technology acc. to IEC 61 076-3-106 variant 4
RJ45-panel feed-throughs and accessories

PushPull

Advantages

- Small, space-saving PushPull Interfaces in IP 65 / IP 67
- Easy handling of RJ45 patch cords in switch cabinets or sets
- Mounting to casings
- Category of transmission Cat. 5

Technical characteristics

Locking	PushPull Technology acc. to IEC 61 076-3-106 variant 4
Transmission rate	10/100/1000 Mbit/s
Shielding	fully shielded, 360° shielding contact
Mating cycles	min. 750
Degree of protection	IP 65 / IP 67
Temperature range	– 40 °C up to + 70 °C
Housing material	Plastic, black
Flammability acc. to UL 94	V 0
	UL approval (E102079)

Identification	Part No.
Panel feed-through set	
incl. housing bulkhead mounting EasyInstall with integrated seal, 2 x RJ45-jacks mounting on PCB board drillings for M3	09 45 245 1130
incl. housing bulkhead mounting Compact, flat seal, 2 x RJ45-jacks mounting on PCB board drillings for M2,5	09 45 245 1102
Protection cover for housing bulkhead mounting	
with cord IP 65 / IP 67 fixing ring for M2.5	
Version with active locking	for screw M2.5 09 45 845 0004
	for screw M3 09 45 845 0006
Version with passive locking	09 45 845 0009
IP 40 transport protection	
for housing bulkhead mounting, rubber	09 45 845 0003

Drawing — Dimensions in mm

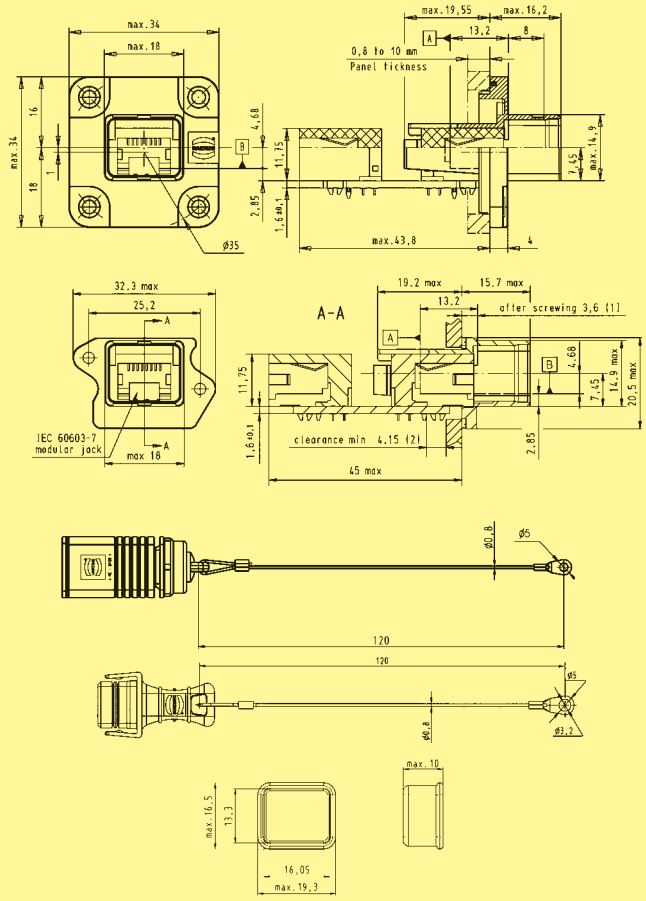

Panel cut outs see page 02.04

HARTING PushPull RJ45

HARTING PushPull Technology acc. to IEC 61 076-3-106 variant 4
RJ45-connector

Advantages

- Ethernet connector based on RJ45
- Fully shielded, 360° shielding contact
- Field-assembly connector
  with IDC contacts (Cat. 5 versions)
  or piercing contacts (Cat.6 versions)

Technical characteristics

Locking	PushPull Technology acc. to IEC 61 076-3-106 variant 4
Degree of protection	IP 65 / IP 67
Mating face	RJ45 acc. to IEC 60 603-7
Cable diameter	6.5 ... 8.6 mm
Termination cross section	
Cat. 5	AWG 24/7 ... AWG 22/7 (stranded) AWG 23/1 ... AWG 22/1 (solid)
Cat. 6	AWG 24/7 ... AWG 27/7 (stranded)
Mating cycles	min. 750
Temperature range	-40 °C up to +70 °C
Housing material	Plastic, black
Flammability acc. to UL 94	V 0
	UL approval (E102079)

Identification	Part No.
Connector, 4-poles Cat. 5 incl. housing with RJ45 connector, shielding and cable gland	09 45 145 1100
Connector, 8-poles Cat. 6 incl. housing with RJ45 connector, shielding and cable gland	
Wire manager white	09 45 145 1500
Wire manager blue	09 45 145 1510
Tools	
System cables in different versions	

Drawing — Dimensions in mm

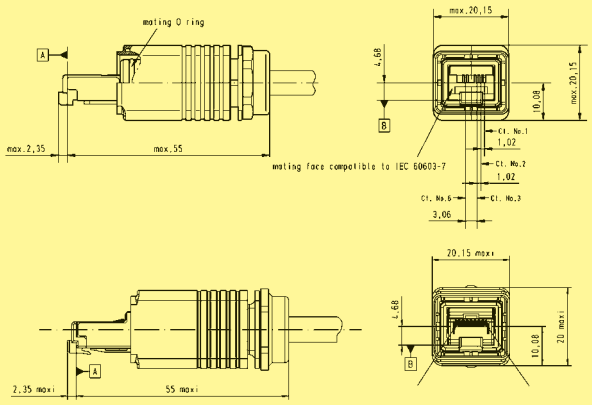

Reference note:
For cat. 6 patch cords it is recommended to use 1 connector with a white wire manager and one with an blue cable manager, in order to optimise the crosstalk between different signal pairs.

see page 01.08

see catalogue " Ethernet Network Solutions for Industry"

HARTING PushPull LC duplex

HARTING PushPull type acc. to IEC 61 076-3-106 variant 4
LC duplex panel feed-through and connector

PushPull

Advantages

- Optical PushPull connector based on LC with small form factor (requires 50 % compared to SC and ST)
- EasyInstall panel feed-through for simple device integration
- Optical module with inserts acc. to IEC 61 754-20
- One-piece LC body assures high mechanical stability
- A & B partsidentification for Duplex according TIA 568 standard

Technical characteristics

Locking	PushPull Technology acc. to IEC 61 076-3-106 variant 4
Degree of protection	IP 65 / IP 67
Mating face	LC acc. to IEC 61 754-20
Cable diameter	6.5 ... 8.6 mm
Mating cycles	min. 750
Temperature range	-40 °C up to +70 °C
Housing material	Plastic, black
Flammability acc. to UL 94	V 0

Identification	Part No.
Device side	
Multimode GOF	09 57 402 0500 000
Singlemode GOF	09 57 402 0501 000
Cable side	
Multimode GOF	09 57 441 0500 000
Singlemode GOF	09 57 441 0501 000

Drawing — Dimensions in mm

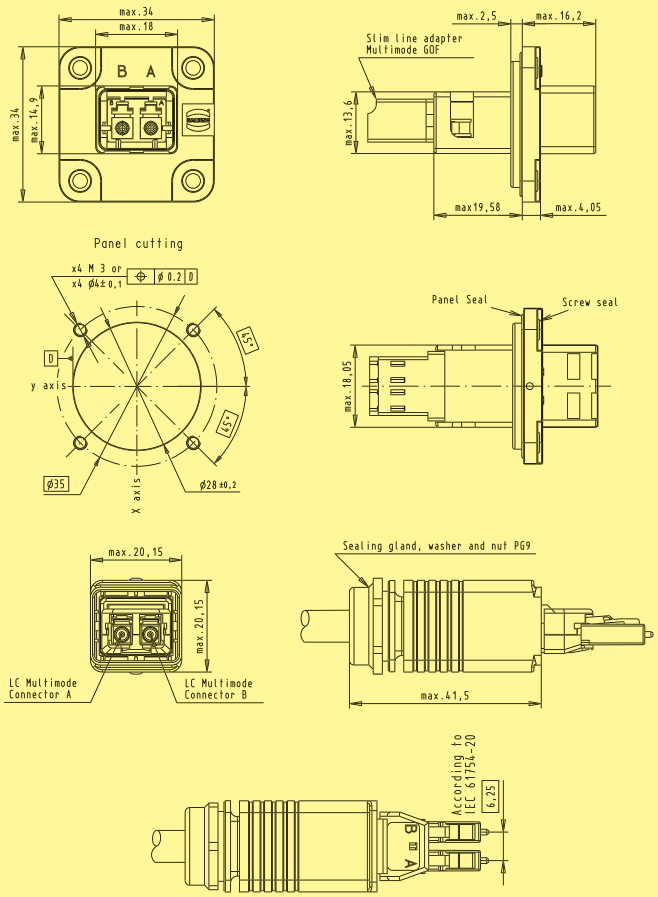

HARTING PushPull LC duplex

LC duplex IP 20 adapter for device integration

Advantages

- Small form factor requires 50 % (compared to SC and ST)
- Compact, space-saving design
- High packing density
- A & B partsidentification according TIA 568 standard
- Complement adapter for IP 67 connector on device side

Technical characteristics

Degree of protection	IP 20
Mating interface	LC duplex with two fibres
Temperature range	-40 °C up to +70 °C

Identification	Part No.
Device side	
Adapter	
Multimode GOF	09 57 400 0003 000
Singlemode GOF	09 57 400 0004 000
Connector LC duplex	
Multimode GOF	09 57 400 0001 000
Singlemode GOF	09 57 400 0002 000

Drawing — Dimensions in mm

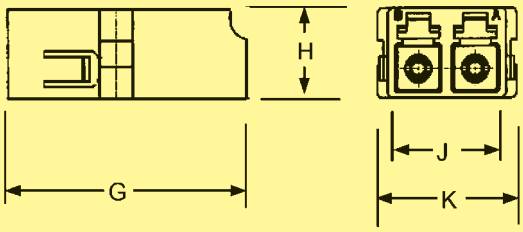

	min.	max.
G	26.60	26.80
H	9.35	9.45
J	12.80	12.90
K	15.24	15.34

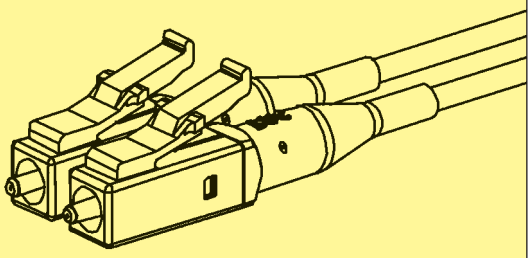

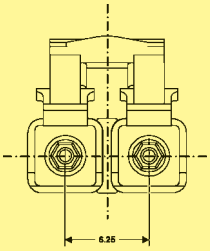

PushPull

HARTING PushPull Hybride
type acc. to IEC 61 076-3-106 variant 4

Advantages

HARTING PushPull Hybrid

In the future all new machine generations will be equipped with Fast Ethernet, no matter if PROFINET, Ethernet/IP, Powerlink, Ethercat, Varan or other Ethernetprofiles.

With the change of the communication technology also the possibility is offered of simplifying the machine installation and of introducing an innovative Hybrid installation concept. This simplification will unite by data and 24V (5A)-supply in a Hybrid cable, at least with the space requirement of a M12-connector.

For this new installation solution HARTING with the HARTING PushPull Hybrid offers the trend-setting installation technology.

Everything is halved: the number of pluggings, the number of cables and the space requirement for the connection technology. Everything becomes simpler: the installation, attaching and safe plugging.

The Hybrid connectors were developed particular under the criteria of simple attaching in the field and the particular safe data communication with the patented omega screen concept. As contacts D-Sub and HDD Sub contacts worked world-wide are used. This socket pin contact system ensures highest reliability and optimal shock and vibration stability.

With the optional available coding pins 6 different codings can be realized.

This connector is available in the variants straight or angled as well as for field assembling or overmolded.

Technical characteristics

Advantages

- Compact, space-saving design
- Very compact housing with high degree of protection
- Polarisation with nose
- Sixfold codable

Typical application areas

- Factory and building automation
- Industrial electronics
- Telecommunication and wireless networks
- Transportation
- Industrial monitoring and camera systems
- Lighting and display technology
- Access control systems

Recommended pin assignment

- Power contacts

Contact	Function	Conductor colour
1	V +	Red
2	Ground	Brown
3	V + (switched)	Yellow

- Data contacts

Contact	Signal	Function	Conductor colour
4	RD –	Receiver Data –	Blue
5	RD +	Receiver Data +	White
6	TD –	Transmission Data –	Orange
7	TD +	Transmission Data +	Yellow

Structure Hybride cable
Data: 4x AWG26/7
Power: 3x AWG20/7

HARTING PushPull Hybride

HARTING PushPull Hybride, type acc. to IEC 61 076-3-106 variant 4
device side

Advantages

- Combined data- and power-supply up to 5A/32V included to one connector
- HARTING PushPull technology
- Compact design
- High packing density
- Sixfold codable
- Suitable for all Fast-Ethernet variants

Technical characteristics

Locking	PushPull Technology acc. to IEC 61 076-3-106 variant 4
Degree of protection	IP 65 / IP 67
Termination	Solder pins
Transmission performance	Category 5 / Class D up to 100 MHz acc. to ISO/IEC 11 801:2002, EN ISO 50 173-1
Transmission rate	10 / 100 Mbit/s
Number of contacts	Data: 4, shielded (Ethernet) Power: 3, (5A / 32V)
Housing material	Plastic, black
Flammability acc. to UL 94	V 0

Identification	Part No.
Components device side	
Set straight HARTING PushPull Hybride housing bulkhead mounting and pcbs female shielded, IP 65 / IP 67, black, 180° straight	09 45 245 1300
Set angled HARTING PushPull Hybride housing bulkhead mounting and pcbs female shielded, IP 65 / IP 67, black, 90° angled	09 45 245 1310 (in preparation)
Female insert	
PCB jack shielded 180° straight	09 45 545 1300
PCB jack shielded 90° angled	09 45 545 1305 (in preparation)
Housing bulkhead mounting	
for female insert straight	09 45 545 1320
for female insert angled	09 45 545 1325 (in preparation)
Panel feed-through	
1 x Hybride female IP 65 / IP 67 on 1 x RJ45 female and 3 pcb clamps, board drillings for M2.5	09 45 245 1320

Drawing — Dimensions in mm

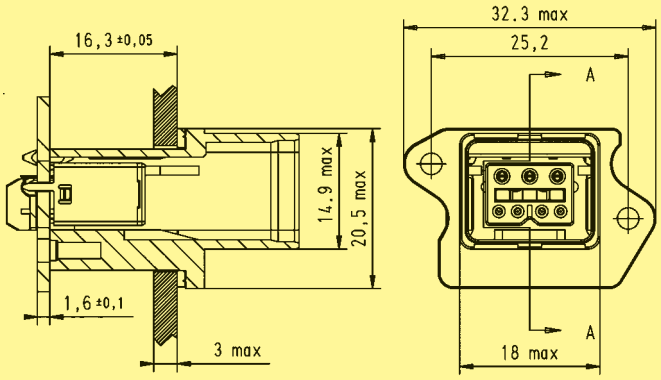

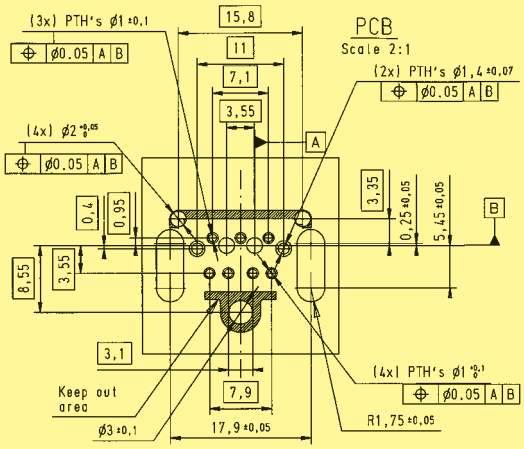

PushPull

HARTING PushPull Hybride

HARTING PushPull Hybride, type acc. to IEC 61 076-3-106 variant 4
Hybride connector

Advantages

- Combined data- and power-supply up to 5A / 32V included to one connector
- HARTING PushPull technology
- Compact design
- High packing density
- Sixfold condable
- Suitable for all Fast-Ethernet variants

Technical characteristics

Locking	PushPull Technology acc. to IEC 61 076-3-106 variant 4
Degree of protection	IP 65 / IP 67
Termination	Crimp
Cable diameter	AWG 26 for Ethernet AWG 20 for Power
Transmission performance	Category 5 / Class D up to 100 MHz acc. to ISO/IEC 11 801:2002, EN ISO 50 173-1
Number of contacts	Data: 4, shielded (Ethernet) Power: 3, (5A / 32V)
Housing material	Plastic, black
Flammability acc. to UL 94	V 0

Identification	Part No.	Drawing	Dimensions in mm
Connector HARTING PushPull Hybride connector, IP 65/ 67, black, with cable gland and crimp contacts		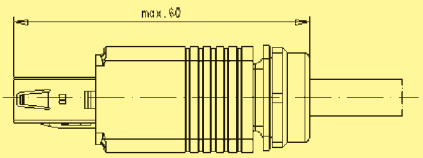	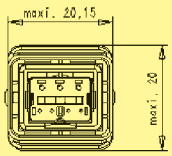
straight	09 45 145 1300		
angled	09 45 145 1310 (in preparation)		
Accessories – Coding pin set to avoid accidental incorrect mating a coding system is required. This coding pins are inserted without loss of contact.	09 45 845 1300		
Tools			
Crimping tool for data contacts	09 99 000 0596		
Crimping tool for power contacts	09 99 000 0175		
Insertion and removal tool			
for data contacts	09 99 000 0513		
for power contacts	09 99 000 0171		

HARTING PushPull Hybride

HARTING PushPull Hybride, type acc. to IEC 61 076-3-106 variant 4
umspritzte Hybride system cables

Advantages

- Combined data- and power-supply up to 5A / 32V included to one connector
- HARTING PushPull technology
- Robust design, suitable for industrial applications
- High packing density
- Sixfold codable
- Suitable for all Fast-Ethernet variants

Technical characteristics

Cable construction:	Twisted Pair shielded + 3 Power Leitungen
Core structure	Data: 4x AWG 26/7 Power: 3x AWG 20/7
Transmission performance	Category 5 / Class D up to 100 MHz acc. to ISO/IEC 11 801:2002, EN ISO 50 173-1
Sheath material	FRNC
Cable-outer diameter	ø (7.0 ±0.4) mm
Shielding	Shielding foil and shielding braid
Temperature range	- 40 up to + 80 °C
Colour	black

Identification			Part No.
System cables 2x HARTING PushPull Hybride			
	Length	0,5 m	09 47 616 1005
		1 m	09 47 616 1010
		2 m	09 47 616 1020
		3 m	09 47 616 1030
		5 m	09 47 616 1050
		10 m	09 47 616 1100
		20 m	09 47 616 1200
System cables 1x HARTING PushPull Hybride, second side open			
	Length	0,5 m	09 47 610 0005
		1 m	09 47 610 0010
		2 m	09 47 610 0020
		3 m	09 47 610 0030
		5 m	09 47 610 0050
		10 m	09 47 610 0100
		20 m	09 47 610 0200
Hybride cable			
	Ring	20 m	09 45 600 0331
	Ring	50 m	09 45 600 0341
	Ring	100 m	09 45 600 0301
	Trommel	500 m	09 45 600 0321

Drawing — Dimensions in mm

Structure Hybride cable

HARTING offers with the Han® PushPull S Power connector an universal solution for the power supply in compact and robust applications. It is in its element whereever small dimensions are combined with a high protection class.

The connector is available in a 4-pole 48 V and a 2-pole 250 V version. The power contacts can carry up to 12 rsp. 16 A each (see deratings). In spite of this high current carrying capacity the connector gets by with minimal dimensions and fulfils the industrial requirements for clearances and creepage distances at eht same time (pollution degree 3 and overvoltage category III).

Additionally the Han® PushPull S Power connector offers the protection class of IP 67 and 65. Beside numerous industrial use cases it is thereby suited for diverse applications in the fields of transportation and telecommunication.

The cable side of the Han® PushPull S Power is terminated with crimping technology. For the receptacle several solutions with different termination technologies are offered.

Regulations
- VDE 0110
- DIN EN 61 984

Advantages
- Minimum space requirements in spite of high current carrying capacity
- Very compact housing in a high protection class
- Protection against contact on plug AND receptacle side enables an easy and safe installation
- For low voltage (48 V) and for power supply (250 V) available
- Codeable without losing contacts
- Different termination technologies for individual device integration

Typical application areas
- Factory and building automation
- Industrial electronics
- Telecommunication and wireless networks
- Transportation
- Industrial monitoring and camera systems
- Lighting and display technology
- Access control systems

Current carrying capacity

The current carrying capacity is determined in tests which are conducted on the basis of the DIN IEC 60 512-5-2. The current carrying capacity in limited by the thermal properties of materials which are used for inserts as well as by the insulating materials. These components have a limiting temperature which should not be exceeded.

Example of a current capacity curve

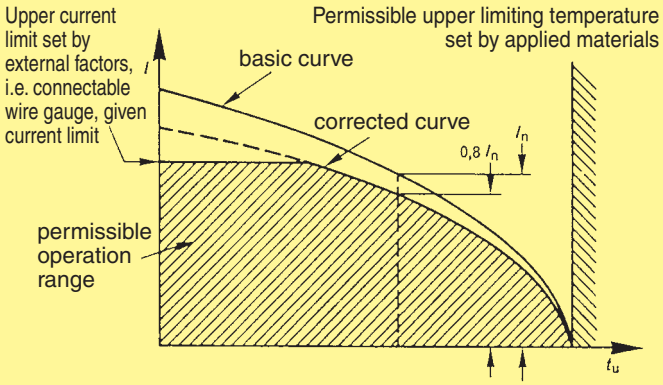

Derating-Diagramm for low voltage, 48V; 4x 12A

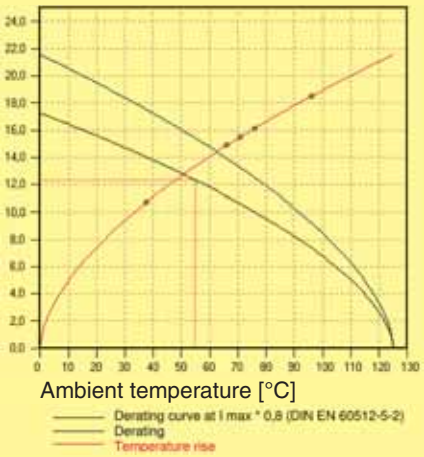

Derating-Diagramm for power supply, 250 V; 2x 16A

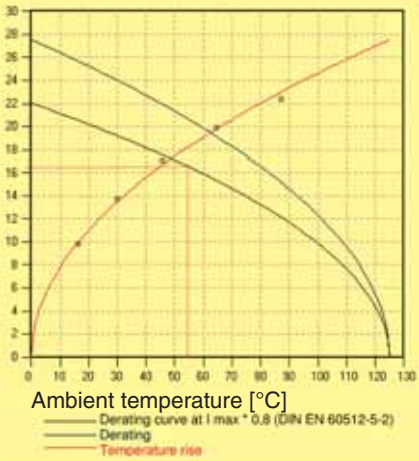

HARTING PushPull Power

HARTING PushPull Power 4/0, type acc. to IEC 61 076-3-106 variant 4
panel feed-throughs 4-poles 48V / 12A

Advantages

- Power connectors for devices
- EasyInstall and Compact panel feed-through and females for simple device integration
- Compact, space-saving design
- Touch-proof according to IEC DIN EN 60 529
- Polarisation with nose
- Device side: female with cable cage, crimp or solder termination
- 4 different coding variants without loss of contact

Technical characteristics

Locking	PushPull Technology acc. to IEC 61 076-3-106 variant 4
Degree of protection	IP 65 / IP 67
Number of contacts	4
Electrical data acc. to EN 61 984	12 A 48 V 1.5 kV 3
Termination	Crimp
Termination cross section	0.75 - 2.5 mm² (AWG 20 - 12) stranded
Termination	Solder pins
Termination diameter	1.6 mm
Termination	Cable cage
Termination cross section	0.75 - 2.5 mm² (AWG 20 - 12) stranded
Mating cycles	min. 750
Temperature range	-40 °C up to +70 °C
Housing material	Plastic, black
Flammability acc. to UL 94	V 0

Identification	Part No.
Panel feed-through set	
Housing bulkhead mounting **EasyInstall** with 4 turned female contacts and insulation	
with crimp termination for 1.5 mm²	09 46 245 4430
with solder termination, 90° angled	09 46 245 4030
with cable cage clamp	09 46 245 4031
Housing bulkhead mounting **Compact** with 4 turned female contacts and insulation	
with crimp termination for 1.5 mm²	09 46 245 4400
with solder termination, 90° angled	09 46 245 4000
with cable cage clamp	09 46 245 4001
Power-female with solder termination 4-poles, 48V/12A, 90° angled	09 46 500 4400
Accessories – crimp contacts female	
0.75 mm² (AWG 20 - 18)	09 46 500 0403
1.5 mm² (AWG 16 - 14)	09 46 500 0401
2.5 mm² (AWG 12)	09 46 500 0405

Drawing — Dimensions in mm

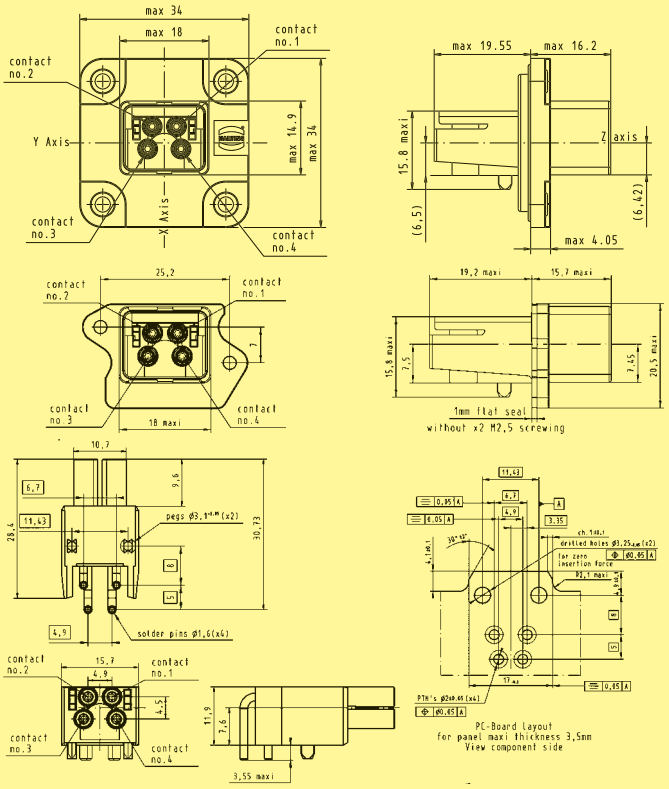

Panel cut outs see page 02.04

HARTING PushPull Power

HARTING PushPull Power 4/0, type acc. to IEC 61 076-3-106 variant 4
connector 4-poles 48V / 12A

PushPull

Advantages

- Power connectors for devices
- EasyInstall panel feed-through for simple device integration
- Compact, space-saving design
- Touch-proof according to IEC DIN EN 60 529
- Polarisation with nose
- Cable side: Male with crimp termination
- 4 different coding variants without loss of contact

Technical characteristics

Locking	PushPull Technology acc. to IEC 61 076-3-106 variant 4
Degree of protection	IP 65 / IP 67
Number of contacts	4
Electrical data acc. to EN 61 984	12 A 48 V 1.5 kV 3
Cable diameter	6,9 ... 8.6 mm
Termination	Crimp
Termination cross section	0.75 - 2.5 mm² (AWG 20 - 12) stranded
Mating cycles	min. 750
Temperature range	-40 °C up to +70 °C
Housing material	Plastic, black
Flammability acc. to UL 94	V 0

Identification	Part No.
Connector set incl. 4 turned crimp contacts (male), insulation, housing, cable gland	09 46 145 4400
Accessories – crimp contacts male	
0.75 mm² (AWG 20 - 18)	09 46 500 0404
1.5 mm² (AWG 16 - 14)	09 46 500 0402
2.5 mm² (AWG 12)	09 46 500 0406
Accessories – Coding pin set to avoid accidental incorrect mating a coding system is required. This coding pins are inserted without loss of contact.	09 46 840 0000
Accessories – protection cover IP 65 / IP 67	
for connector with cord	09 45 845 0001
for device side with cord	09 45 845 0009
Accessories – transport protection IP40	
for connector, rubber	09 45 845 0003

Drawing — Dimensions in mm

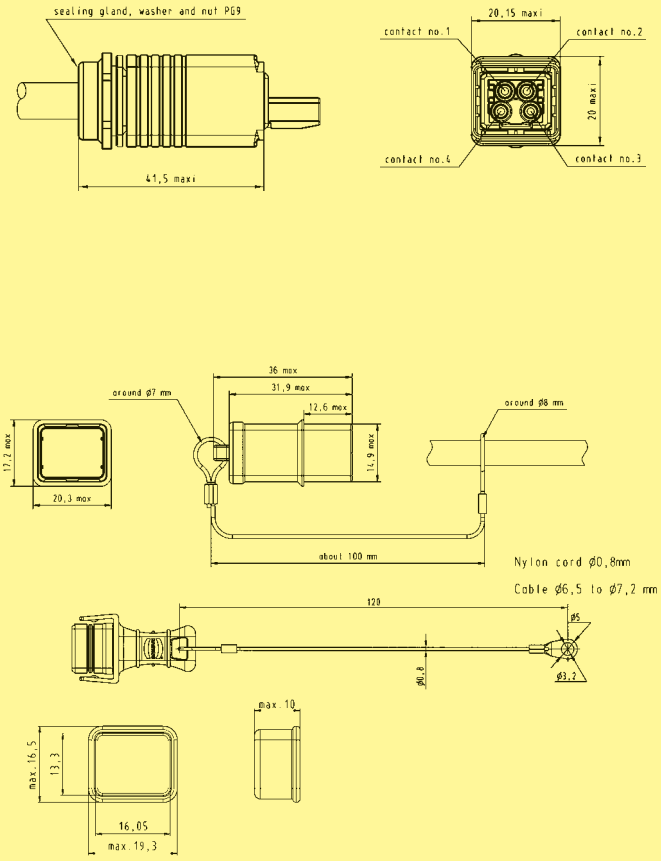

HARTING PushPull Power 2/0, type acc. to IEC 61 076-3-106 variant 4
panel feed-through and connector, 3-poles, 250 V / 16 A

Advantages

- Power connectors for devices
- EasyInstall panel feed-through for simple device integration
- Compact, space-saving design
- Touch-proof according to IEC DIN EN 60 529
- Polarisation with nose
- Cable side: Male with crimp termination
- Device side: female with crimp termination
- 4 different coding variants without loss of contact

Technical characteristics

Locking	PushPull Technology acc. to IEC 61 076-3-106 variant 4
Degree of protection	IP 65 / IP 67
Number of contacts	2 + PE
Electrical data acc. to EN 61 984	16 A 250 V 4 kV 3
Cable diameter	6,9 ... 8.6 mm
Termination	Crimp
Termination cross section	0.75 - 2.5 mm² (AWG 20 - 12) stranded
Mating cycles	min. 750
Temperature range	-40 °C up to +70 °C
Housing material	Plastic, black
Flammability acc. to UL 94	V 0

Identification	Part No.
HARTING PushPull Power 2/0	
Panel feed-through set incl. 3 turned crimp contacts (female), insulation (black), housing bulkhead mounting EasyInstall	09 46 245 3430
Panel feed-through set incl. 3 turned female contacts, insulation (black), housing bulkhead mounting, with crimp termination	09 46 245 3410
Connector set incl. 3 turned crimp contacts (male), insulation (black), housing, cable gland	09 46 145 3410
Coding pin set to avoid accidental incorrect mating a coding system is required. This coding pins are inserted without loss of contact.	09 46 840 0000
Protection cover IP 65 / 67 with cord	09 45 845 0001

Drawing — Dimensions in mm

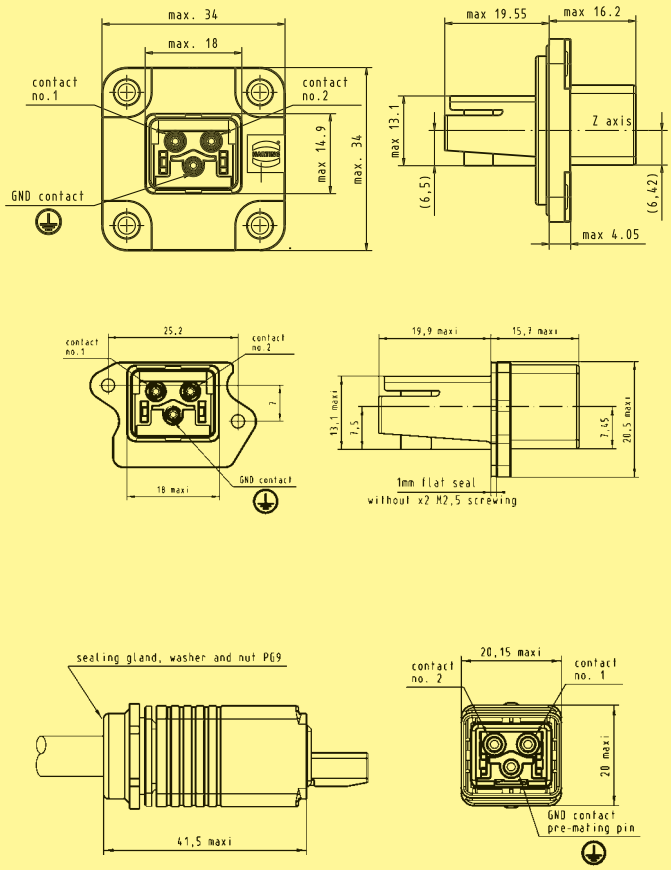

Crimp contacts see page 02.15 (female) and page 02.16 (male)
Panel cut outs see page 02.04

Identification	Part No.
Han® PushPull Power 8-indent crimping tool	09 46 800 0000
Locator HARTING PushPull Power contacts for crimping tool	09 46 800 0010
Crimping tool depth adjustment gauge	
Ø 1.02 mm	09 46 800 0002
Ø 1.15 mm	09 46 800 0003
Insertion tool	09 46 800 0099
Extraction tool	09 46 800 0098

For wire gauges 0.08 … 4.0 mm² (AWG 28 … 12).

For the fine adjustment of the crimping depth of the Han® PushPull Power 8-indent crimping tool.

Wire	Gauge
0.25 mm² … 1.50 mm²	Ø 1.02 mm
1.50 mm² … 2.50 mm²	Ø 1.15 mm

For an easy insertion and extraction of the male and female crimp contacts into / out of the insulator body.

Crimp connection

A perfect crimp connection is gastight, therefore corrosion free and amounts to a cold weld of the parts being connected. For this reason, major features in achieving high quality crimp connections are the design of the contact crimping parts and of course the crimping tool itself. Wires to be connected must be carefully matched with the correct size of crimp contacts. If these basic requirements are met, users will be assured of highly reliable connections with low contact resistance and high resistance to corrosive attack.

The economic and technical advantages are:

- Constant contact resistance as a result of precisely repeated crimp connection quality
- Corrosion free connections as a result of cold weld action
- Pre-preparation of cable forms with crimp contacts fitted
- Optimum cost cable connection

Requirements for crimp connectors are laid down in DIN IEC 60 352-2, Amend. 2, as illustrated in the table.

Pull out force of stranded wire

The main criterion to judge the quality of a crimp connection is the retention force achieved by the wire conductor in the terminal section of the contact. DIN IEC 60 352, part 2, defines the extraction force in relation to the cross-section of the conductor. When fitted using HARTING crimping tools and subject to their utilization in an approved manner, our crimp connectors comply with the required extraction forces.

Tensile strength of crimped connections

Conductor cross-section		Tensile strength
mm²	AWG	N
0.08	28	11
0.12	26	15
0.14		18
0.22	24	28
0.25		32
0.32	22	40
0.5	20	60
0.75		85
0.82	18	90
1.0		108
1.3	16	135
1.5		150
2.1	14	200
2.5		230
3.3	12	275
4.0		310

Extract from DIN IEC 60 352-2, Amend. 2, Table IV

Crimping tools

Crimping tools (hand operated or automatic) are carefully designed to produce with high pressure forming parts a symmetrical connection of the crimping part of the contact and the wire being connected with the minimum increase in size at the connection point. The positioner automatically locates the crimp and wire at the correct point in the tool.

A ratchet in the tool performs 2 functions:

① It prevents insertion of the crimp into the tool for crimping before the jaws are fully open

② It prevents the tool being opened before the crimping action is completed

Identical, perfectly formed, connections can be produced using this crimping system.

Crimp-cross section
HARTING crimp profile

Han® PushPull RJ45

Han® PushPull, type acc. to
IEC/PAS 61 076-3-117 variant 14
Housing bulkhead mounting for device integration and RJ45 jacks

Features

- HARTING PushPull technology
- Compact design
- High packing density
- Device integration via RJ45 pcb connectors
- Field-assembly connector with IDC contacts (Cat. 5 versions) or piercing contacts (Cat. 6 versions)

Technical characteristics

Locking	PushPull technology acc. to IEC/PAS 61 076-3-117
Degree of protection	IP 65 / IP 67
Mating face	RJ45 acc. to IEC 60 603-7
Termination cross section	
for Cat. 5	AWG 24/7 – 22/7 (stranded) AWG 23/1 – 22/1 (solid)
for Cat. 6	AWG 24/7 – 27/7 (stranded)
Mating cycles	min. 750
Temperature range	-40 °C ... +70 °C
Housing material	Plastic, black
Flammability acc. to UL 94	V 0
Cable diameter	5 – 9.5 mm
Housing material	Zinc die-cast, nickel plated
Cable diameter	4 – 11 mm

Identification	Part No.
Components device side	
Housing bulkhead mounting plastic	09 35 002 0321
metal	09 35 002 0301
Dust protection cover IP 20 rubber (NBR)	09 35 002 5401
RJ45 female Solder variant, 90° angled	09 35 002 2101
Solder variant, 180° straight	09 35 002 2102

Drawing — Dimensions in mm

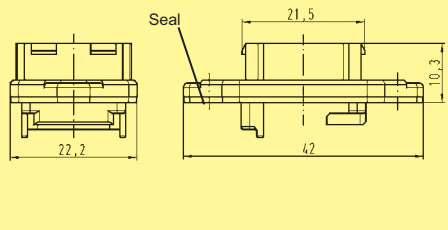

Panel cut out

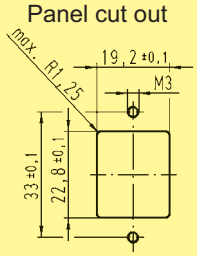

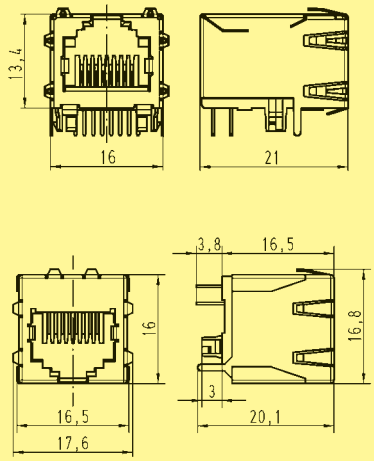

pcb layout

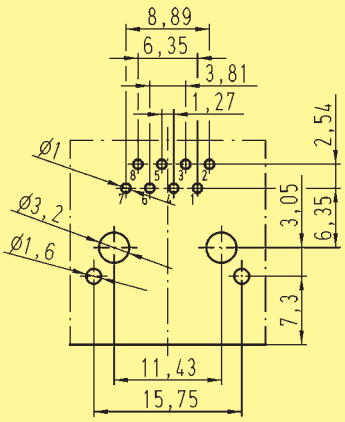

Han® PushPull RJ45

Han® PushPull, type acc. to IEC/PAS 61 076-3-117 variant 14
RJ45 connector

Identification	Part No.	Drawing	Dimensions in mm
Connector set, plastic incl. housing and male insert			
Category 5, 4-poles HARTING RJ Industrial®			
6.5 – 9.5 mm clamp range PROFINET-Identification: PROFINET O-Plug RJ45	09 35 221 0421	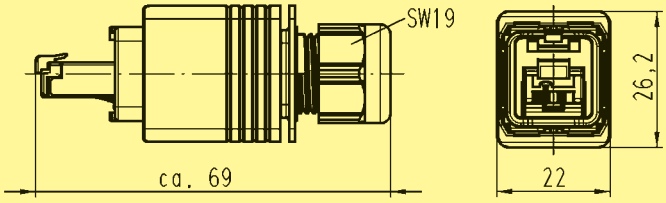	
5 – 8 mm clamp range	09 35 222 0421		
Category 6, 8-poles 6.5 – 9.5 mm clamp range Wire manager, white	09 35 223 0421		
Wire manager, blue	09 35 224 0421		
Connector set, metal incl. housing and male insert			
Category 5, 4-poles HARTING RJ Industrial® 4 – 11 mm clamp range PROFINET-Identification: PROFINET O-Plug RJ45	09 35 221 0401	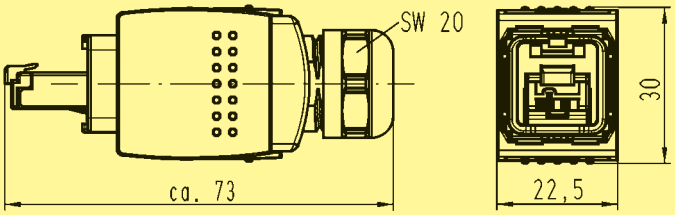	
Category 6, 8-poles 4 – 11 mm clamp range Wire manager, white	09 35 223 0401		
Wire manager, blue	09 35 224 0401		
Tools		see page 01.08	
Assembled system cables		see catalogue " Ethernet Network Solutions for Industry"	

Han® PushPull SCRJ

Han® PushPull, type acc. to IEC/PAS 61 076-3-117 variant 14
Housing bulkhead mounting for device integration
Optical connector based on SCRJ

Features

- HARTING PushPull technology
- Compact design
- High packing density
- Device integration via transceiver
- Han® PushPull SCRJ for POF is according the requirements of AIDA (German Domestic Automobile Manufacturers)

Technical characteristics

Locking	PushPull technology acc. to IEC/PAS 61 076-3-117
Degree of protection	IP 65 / IP 67
Mating face	SCRJ acc. to IEC 61 754-24 (draft)
Fiber Typen	POF[1] 1 mm HCS®[2] 200 µm / 230 µm MM 62,5 µm / 125 µm MM 50 µm / 125 µm
Mating cycles	min. 750
Temperature range	-40 °C ... +70 °C
Cable diameter	4 – 11 mm
Housing material	Plastic, black
Flammability acc. to UL 94	V 0
Housing material	Zinc die-cast, nickel plated

Identification	Part No.
Components device side	
Housing bulkhead mounting Optical transceiver not included	
plastic	09 35 002 0323
metal	09 35 002 0303
Dust protection cover IP 20 rubber (NBR)	09 35 002 5401
Reference for transceiver as well as mounting instruction on request	

Drawing — Dimensions in mm

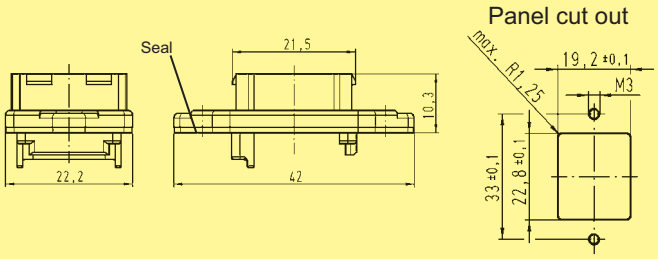

[1] POF = Polymer-Optical Fibre
[2] HCS® = Hard Clad Silica (registered trademark of SpecTran Corporation)

Han® PushPull, type acc. to IEC/PAS 61 076-3-117 variant 14 SCRJ connector

Identification	Part No.	Drawing	Dimensions in mm
Connector set, plastic incl. housing and insert			
with SC contacts for POF[1] 1 mm PROFINET-Identification: PROFINET O-Plug RJ45	09 35 241 0422	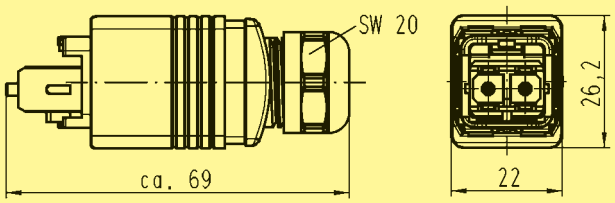	
with SC contacts HCS®[2] 200 µm / 230 µm	09 35 242 0422 on request		
with SC contacts glass fibre 50/62,5 µm / 125 µm	09 35 243 0422 on request		
Connector set, metal incl. housing and insert			
with SC contacts for POF[1] 1 mm PROFINET-Identification: PROFINET O-Plug RJ45	09 35 241 0402	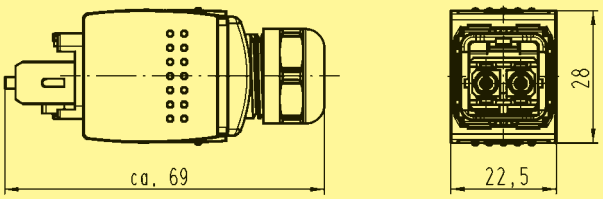	
with SC contacts HCS®[2] 200 µm / 230 µm	09 35 242 0402 on request		
with SC contacts glass fibre 50/62,5 µm / 125 µm	09 35 243 0402 on request		

Han® PushPull Power 4/0

Han-Quick Lock®

Han® PushPull, type acc. to
IEC/PAS 61 076-3-117 variant 14
Housing bulkhead mounting and power females for device integration

Features

- HARTING PushPull technology
- Compact, space-saving design
- Touch-proof
- Cable side: female
  - crimp termination
  - Han-Quick Lock® termination technology
    Field-assembly without special tools
- Device side: male
  - Solder variant, angled

Technical characteristics

Locking	PushPull technology acc. to IEC/PAS 61 076-3-117
Degree of protection	IP 65 / IP 67
Number of contacts	4 + PE
Electrical data acc. to DIN EN 61 984	16 A 230/400 V 4 kV 3
Termination	Crimp (Han® P contacts)
Termination cross section	0,5 – 2,5 mm²
Termination	Han-Quick Lock®
Termination cross section	0,5 – 2,5 mm²
Mating cycles	min. 500
Temperature range	-40 °C ... +85 °C
Housing material	Plastic, black
Flammability acc. to UL 94	V 0
Cable diameter	9 – 13 mm
Housing material	Zinc die-cast, nickel plated
Cable diameter	4 – 11 mm

Identification	Part No.	Drawing	Dimensions in mm
Components device side			
Housing bulkhead mounting plastic	09 35 002 0323		
Housing bulkhead mounting metal	09 35 002 0303		
Dust protection cover IP 20, rubber (NBR)	09 35 002 5401		
Male insert with solder termination angled	09 35 002 3003		
Set device side			
incl. housing and male insert with solder termination, angled			
plastic	09 35 233 0323		
metal	09 35 233 0303		

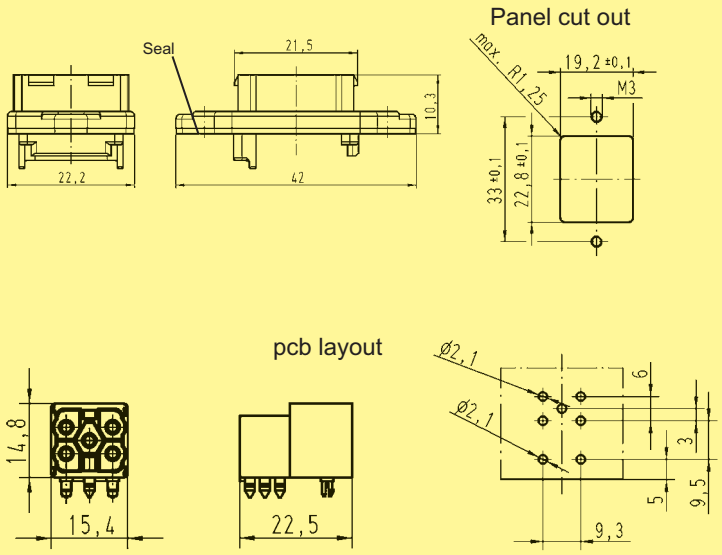

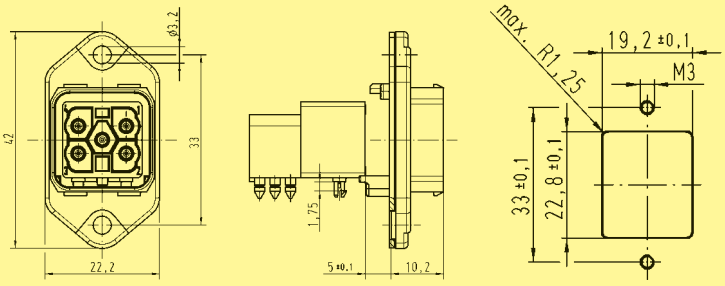

Han® PushPull, type acc. to
IEC/PAS 61 076-3-117 variant 14
Connector, 5-poles, 230/400 V, 16 A

Identification	Part No.	Drawing	Dimensions in mm
Connector set, plastic incl. housing and female insert with crimp termination 9 – 13 mm clamp range Han® P crimp contacts order separately	09 35 231 0423	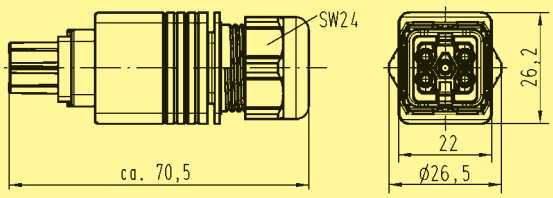	
with Han-Quick Lock® termination 9 – 13 mm clamp range Han-Quick Lock®	09 35 232 0423		
with Han-Quick Lock® termination 6.5 – 9.5 mm clamp range Han-Quick Lock®	09 35 232 0421	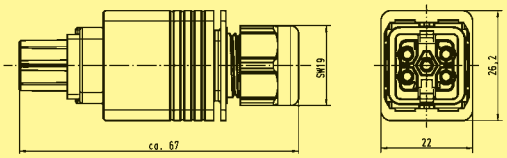	
Connector set, metal incl. housing and female insert with crimp termination 4 – 11 mm clamp range Han® P crimp contacts order separately	09 35 231 0401	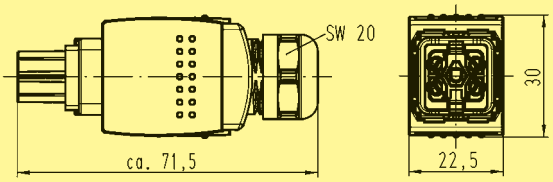	
with Han-Quick Lock® termination 4 – 11 mm clamp range Han-Quick Lock®	09 35 232 0401		

Han® PushPull, type acc. to
IEC/PAS 61 076-3-117 variant 14
Accessories

Identification	Part No.	Drawing	Dimensions in mm
Crimp contacts Han® P			
female, silver-plated			
for 0.5 mm²	09 35 000 6203	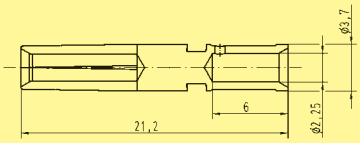	
for 0.75 mm²	09 35 000 6204		
for 1.0 mm²	09 35 000 6205		
for 1.5 mm²	09 35 000 6206		
for 2.5 mm²	09 35 000 6207		
BUCHANAN-crimping tool	09 99 000 0001		
Locator Han P®			
for crimping tool 09 99 000 0001	09 99 000 0329		
Multiple crimping tool depth adjustment gauge	09 99 000 0379	Wire gauge 0.5 - 1 mm² ø 1.55 1.5 - 2.5 mm² ø 1.80	
Removal tool Han P®	09 99 000 0319		

Mounting instructions

Han-Quick Lock®

Insertion

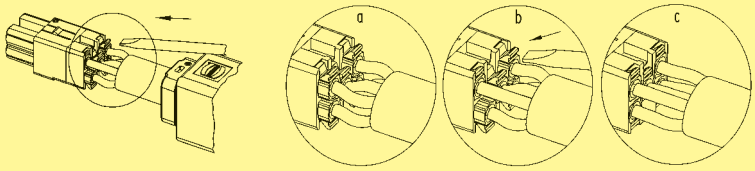

Please note: squeeze wires while the slider is inserted.

Removal

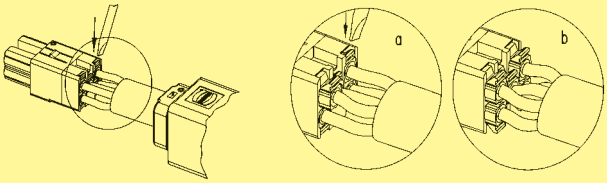

Han® PushPull L Power 4/0

Housing bulkhead mounting and power females for device integration

Features

- HARTING PushPull technology
- Touch-proof
- Cable side: female
  - spring force connection
- Device side: male
  - Solder variant, angled and straight
- AIDA-conform
  (German Domestic Automobile Manufactures)

Technical characteristics

Locking	PushPull technology acc. to IEC/PAS 61 076-3-117
Degree of protection	IP 65 / IP 67
Number of contacts	4 + PE
Electrical data acc. to DIN EN 61 984	16 A 24 V
Termination	Spring force connection
Termination cross section	AWG 18 – 13
Mating cycles	min. 500
Temperature range	-40 °C ... +70 °C
Cable diameter	9 – 13 mm
Housing material	Plastic, black
Flammability acc. to UL 94	V 0
Housing material	Zinc die-cast, nickel plated

Identification	Part No.	Drawing	Dimensions in mm
Components device side			
Housing bulkhead mounting plastic	09 35 004 0321	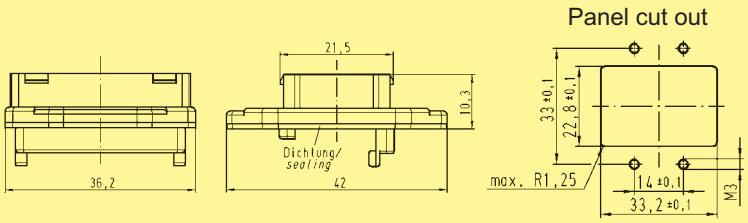	
Housing bulkhead mounting metal	09 35 004 0301		
Male insert with solder termination angled	09 35 004 3003	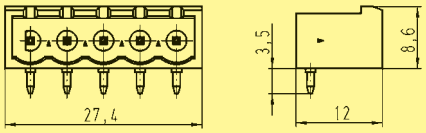	
Male insert with solder termination straight	09 35 004 3004	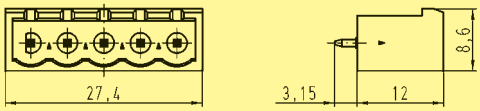	

Connector, 5-poles, 24 V, 16 A

Identification	Part No.	Drawing	Dimensions in mm
Set components device side, plastic incl. housing and male insert with spring force connection	09 35 431 0321	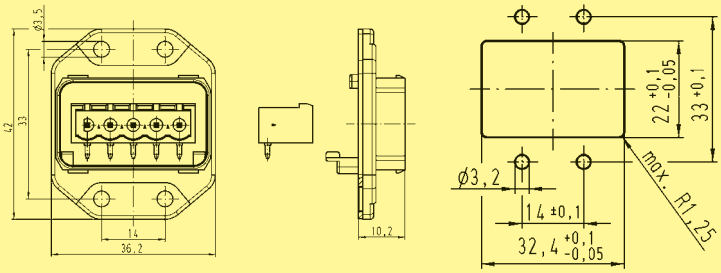	
Set components device side, metal incl. housing and male insert with spring force connection	09 35 431 0301		
Connector set, plastic incl. housing and female insert with spring force connection	09 35 431 0421	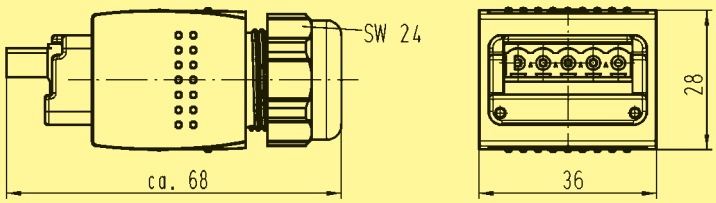	
Connector set, metal incl. housing and female insert with spring force connection	09 35 431 0401		